A Marine Triple Expansion Engine

The O. B. Bolton design uprated by J. P. Bertinat

Part 1

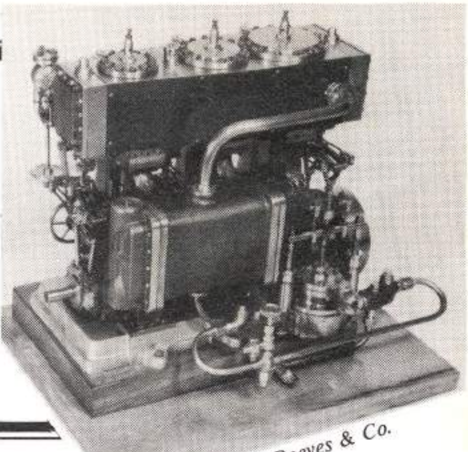

Photo: A. J. Reeves & Co.

Marine and stationary steam engines have always fascinated me, and when castings became available for an engine which was slightly out of the ordinary, of convenient size for the equipment available (cylinders $\frac{7}{8}$ in., $1\frac{1}{4}$ in. and $1\frac{3}{4}$ in. bore × $1\frac{1}{4}$ in. stroke) and a good representation of the larger type of marine steam engine, I decided to add one to my collection.

The model to be described is based on an O.B. Bolton design and was the subject of an early set of drawings issued by Model and Allied Publications under their reference 'M.1.' Before starting on any new project, it is my practice to thoroughly scrutinize all drawings, making additional layouts where considered necessary in order to check compatibility of mating parts. As a result of this process, I decided that I would like to make several minor changes to bring the design into line with up-to-date model engineering practice and at the same time to iron out one or two snags in the original drawings.

After some discussion with our Editor, I was asked if I would undertake to redraw the entire model on the lines I had previously taken for the *Trojan* and *Warrior* engines. What follows is my attempt at this, together with notes on my methods of construction (it is fortunate that I made a few notes and took some photographs when I made the engine some four years ago!); any modifications introduced are entirely within the limits of available castings.

When preparing the new drawings I have made constant reference to my finished engine and to a set of castings kindly made available to me by the suppliers. Apart from the aluminium alloy bedplate, all castings (30 lb. of them!) are of gunmetal and presented no difficulty in machining; I added a cast iron flywheel.

The photographs (Figs. 1 and 2, by courtesy of Reeves) show the model completed but prior to being stripped for painting. (I am ashamed to reveal that several years and projects later the engine is still in the same state!). Although cylinder-wise the engine is only slightly larger than the popular Stuart triple (the L.P. cylinders are of the same bore, but the stroke of the Stuart is 1 in. against $1\frac{1}{4}$ in. for the Bolton), it is much more heavily built — mine scales 25 lb.

The Bolton design with its substantial cast supporting standards and double expansion links is characteristic of larger marine engine practice, whereas the Stuart design portrays the type of engine formerly used in launches and other small steam vessels. As will be seen from Fig. 2, the Bolton engine has a condenser cast integral with two of the supporting standards, giving a really hefty chunk of gunmetal and incidentally an excellent example of the foundryman's skill.

In full scale practice, the cast standards are of hollow or box section, and the solid castings of the model feel rather heavy until assembled into the engine. I did query the rather lavish use of gunmetal throughout the engine and apparently the economics of small batch production played a large part in the choice of material.

An unusual feature of the engine is the absence of external piping from the high pressure exhaust to the intermediate pressure inlet; the transfer is in this case effected by drilled passageways within the high pressure cylinder block, these passages being on either side of the high pressure cylinder bore.

The air or vacuum pump and the twin boiler feed pumps (Fig. 2) are driven by a rocking lever from the crosshead of the

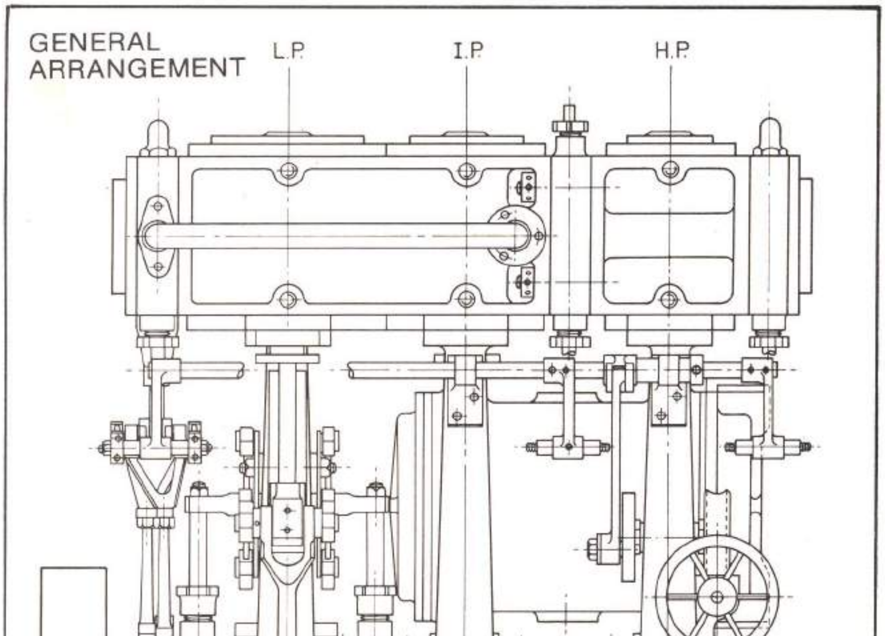

Cylinders: $\frac{7}{8}$ in. $1\frac{1}{4}$ in. & $1\frac{3}{4}$ in. bore × $1\frac{1}{4}$ in. stroke ©

low pressure cylinder, and with their attendant pipework form an impressive accessory. In the pipework for the feed pumps I have employed normal hexagon unions, whereas in this type of engine, flanged and bolted unions would be more in keeping with the general scale, but less practical for an engine which has to be used and maintained.

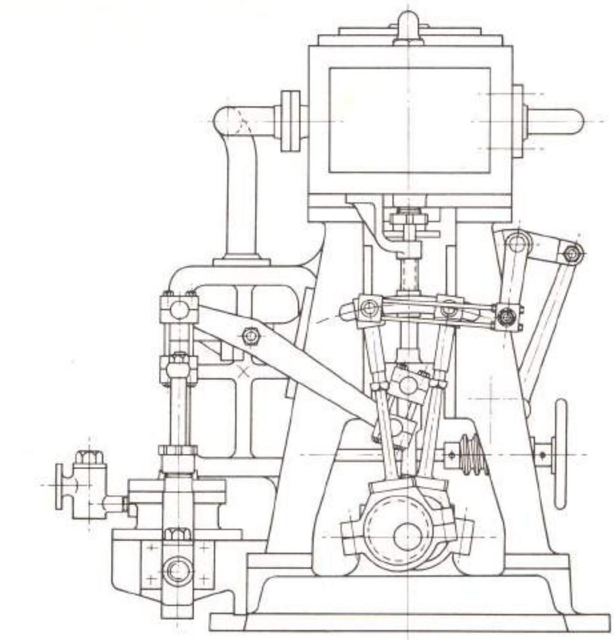

END ELEVATION FROM L.P. CYLINDER

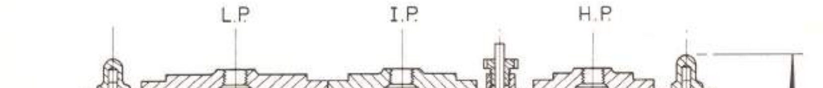

PART SECTIONAL ELEVATION

Before describing the parts and their machining, experience at club meetings has suggested that a few general remarks about triple expansion engines may not be out of place. Any form of multiple expansion steam engine has as its object the use of very early cut-off resulting in more efficient expansive use of the steam. The use of very early cut-off in a single cylinder means that there is a considerable pressure range and hence temperature range between inlet and exhaust steam, and this gives rise to considerable heat losses. Very early cut-off also creates problems with valve gear design.

In addition to alleviating the above problems, dividing the pressure drop into two stages (compounding) or into three stages (triple expansion) produces an engine with much better torque characteristics, and one in which an acceptable degree of balancing may be more readily achieved. It must be emphasised however that the theoretical power output from such an engine is the same as if all the expansion were carried out in the final or low pressure cylinder.

Fig. 3 is a simplified indicator or pressure-volume diagram for a triple expansion engine. The shaded areas (1), (2) and (3) represent respectively the work done in the high pressure, intermediate pressure and low pressure cylinders; ideally the relative cylinder volumes and the cut-off ratios should be such that these work areas are equalised as far as possible. In the diagram, V_1, V_2 and V_3 represent the respective cylinder volumes. The diagram is drawn for an overall expansion ratio of 10 i.e. the cut-off is at 10% whereas for each of the three cylinders, the cut-off occurs at about 60% stroke, a more easily obtainable value with normal slide or piston valves. It will also be noted that the minimum pressure in the low pressure cylinder is below that of the atmosphere, and further, if this were not so, the work done in the low pressure cylinder would be considerably reduced. Hence the triple expansion engine is invariably fitted with a condenser, the lower pressure or vacuum being achieved by the extraction or air pump, so named because in addition to extracting the condensed steam, it also removes any air which may have leaked into the system.

The diagram also illustrates that for a reasonable overall expansion, the steam must be supplied at a higher pressure than is essential in a single expansion engine. A reasonable degree of superheat is also very desirable to minimise losses due to partial condensation during expansion. In some marine installations (and in power station turbines), interstage reheating is employed, i.e. the steam is reheated between exhausting from the high pressure cylinder and entering the intermediate or low pressure cylinder. LBSC used this device in his successful compound locomotive *Jeanie Deans.*

Returning to the model, the accompanying general arrangement drawing gives a side elevation looking on the weighshaft side and an end view of the

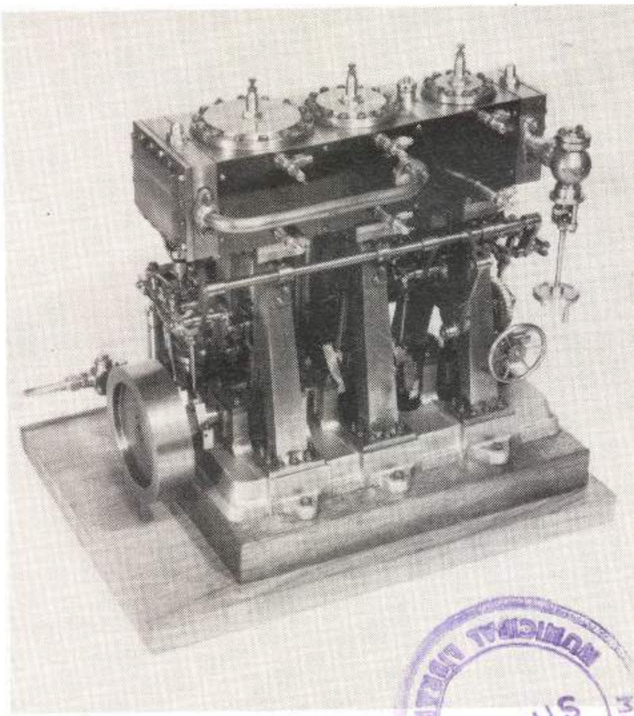

Fig. 1: The completed model, driver's side. (Photo courtesy A. J. Reeves & Co. (Birmingham) Ltd).

engine looking on the low pressure cylinder. In the side elevation, the left hand standard has been removed to show the crosshead and crankshaft etc., and, in order to show more of the condenser (which appears in the rear in this view), the I.P. and H.P. valve gear has been omitted. Reversing is by handwheel operating through worm and worm wheel. The pump unit, consisting of a central air pump to which are bolted twin boiler feed pumps, forms a convenient sub-assembly which is bolted to the base of the L.P. standard on the condenser side of the engine.

For the benefit of any readers who may have the original drawings, I list below the main changes which have been introduced:

1) Increased steam port sizes.

2) Increased transfer and exhaust pipe diameters. This change has necessitated the use of separate exhaust flanges, since the bosses on the castings were too small to accept the increased sizes.

3) The main steam inlet has been removed from the valve chest cover to a more normal position on the valve chest side.

4) Bolt and stud position in the cylinder blocks have been amended to provide more practical and convenient positions.

5) The original drawings indicated an integral flange on each end of the crankshaft, which feature would have necessitated all eccentric sheaves being divided. In the revision I have omitted these flanges and made provision for a flywheel to be fitted. In this latter respect I have departed from full-scale practice in which the inertia of the propeller and its shaft usually fulfils the function of a flywheel, but in a model the wheel is at least useful for turning the engine over!

6) More detail has been added to many of the valve gear component drawings.

In the new drawings I have concentrated on the dimensions necessary for machining and finishing, i.e. dimensions which would be required solely for pattern making are not always given. This procedure was adopted since a) castings are already available; b) some constructors have been confused by the dimensioning system used, particularly in the main bedplate. In a complicated project of this nature it is inevitable that many parts have to serve as jigs for spotting through holes in adjacent parts and it is thus often necessary to partially complete many items and then set them aside until the mating part is well under way. I have tried to minimise this by starting with the cylinder unit, progressing down to the standards (possibly completing the internal parts of the condenser at this stage) and then to the bedplate and crankshaft and its associated parts. The valve gear and pumps can be dealt with towards the final stages.

To be continued

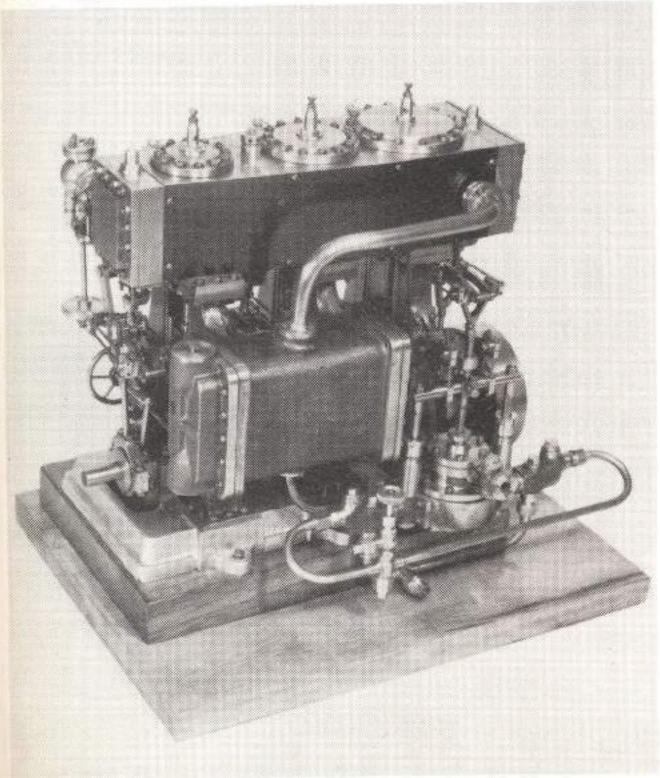

Fig. 2. This shows the model made by the Author, the condenser is clearly seen. (Photo courtesy A. J. Reeves & Co (Birmingham) Ltd).

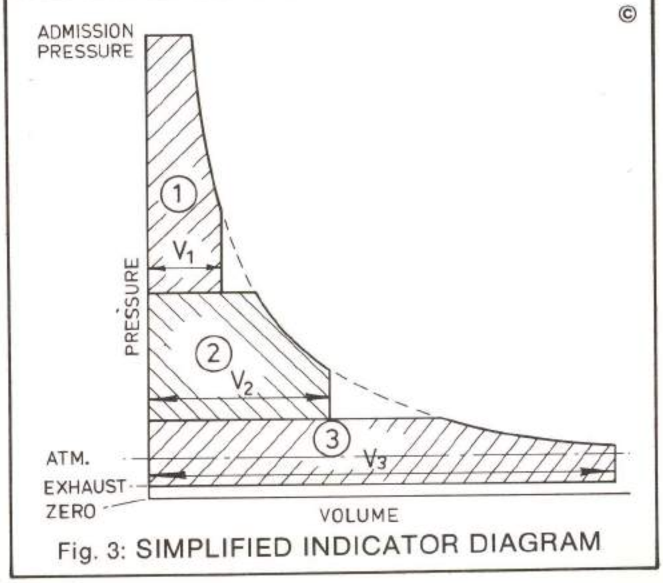

Fig. 3: SIMPLIFIED INDICATOR DIAGRAM

A Marine Triple Expansion Engine

The O. B. Bolton design updated

by J. P. Bertinat

Part II From Page 209

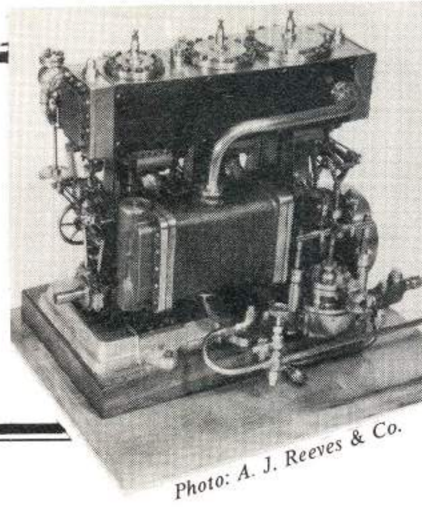

Photo: A. J. Reeves & Co.

In Part I the Author discussed the reasons which led to this updating of the original design. The new plans are available from Plans Service, designated M.1. Castings for the engine are available from A. J. Reeves & Co. of Birmingham. This time we commence the construction.

Fig. 4: Machining the I.P./L.P. cylinder block to provide a datum face for future operations.

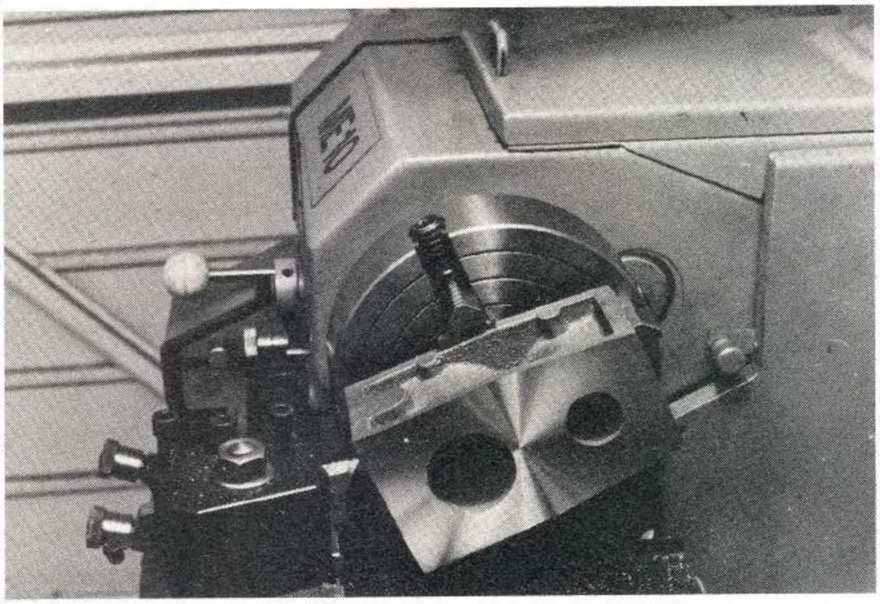

The drawing shows the cylinder blocks and valve chests. At the outset I would emphasise the need for maintaining the greatest possible accuracy in maintaining the dimensions of the blocks and of the intermediate pressure valve chest which will affect cylinder spacing; otherwise awkward problems will arise at the erection stage.

L.P./I.P. Cylinder Block

After general cleaning up with an old file, the first operation on this component is to machine the top face to provide a datum for subsequent operations. Fig. 4 shows the set up for this operation for which a

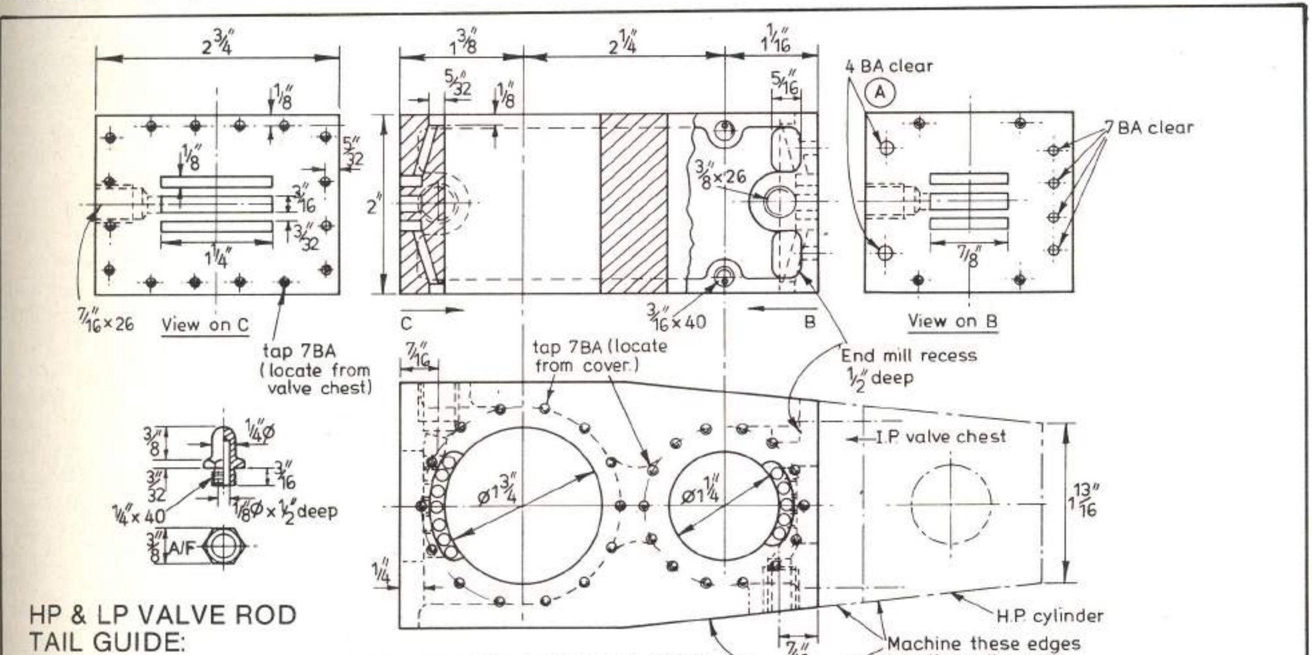

HP & LP VALVE ROD TAIL GUIDE:
2 off brass

L.P./I.P. CYLINDER BLOCK:
1 off Gunmetal

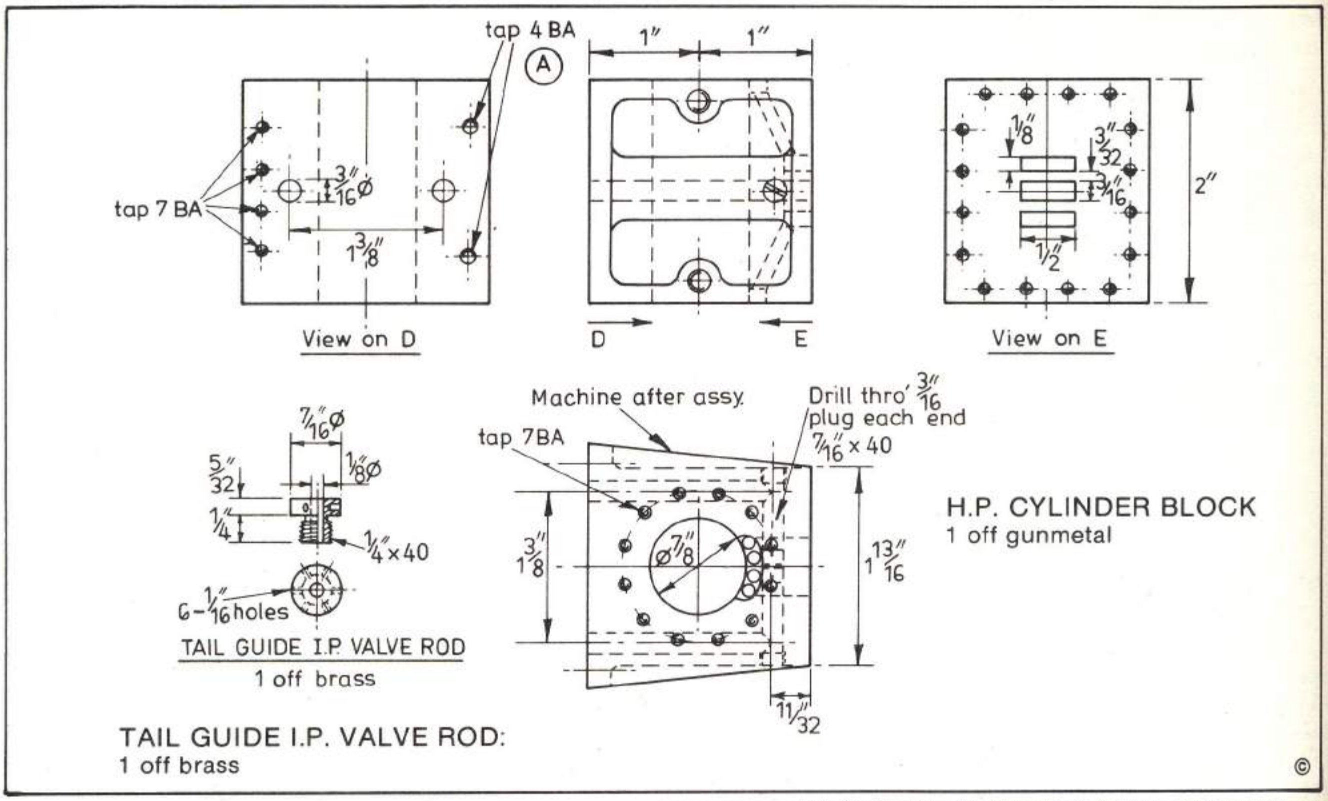

H.P. CYLINDER BLOCK
1 off gunmetal

TAIL GUIDE I.P. VALVE ROD:
1 off brass

lathe with power crossfeed is a distinct advantage. The lower ends of the cylinder bores are then plugged, their centres marked out, and the work mounted on the faceplate for boring, the block locating on the previously machined surface and being packed out by parallel strips to enable the boring bar to clear the faceplate. This operation is shown in the photograph (Fig. 5).

ML 7 users would need to bore the cylinders from the boring table since the narrow gap in the bed will not allow the block to swing on the faceplate, but users of the faithful old Drummond 3½ in. will be O.K. (I recently parted with my Drummond — after 46 years — and have already come across some jobs which I could have done more quickly on it than on a more modern machine).

The end or valve faces of the block are machined by gripping it between two angle plates mounted on a faceplate as shown in Fig. 6; alternately the job could be done from the boring table with a fly-cutter in the chuck. At the same setting, the parallel sides of the block at the L.P. end can be machined to the overall width of 2¾ in., the casting being gripped at the L.P. bore and rotated 90 deg. each way from the port facing position. Machining the inclined sides of the block is best left until the I.P. valve chest and H.P. cylinder are fitted, when the complete assembly may be dealt with at one go.

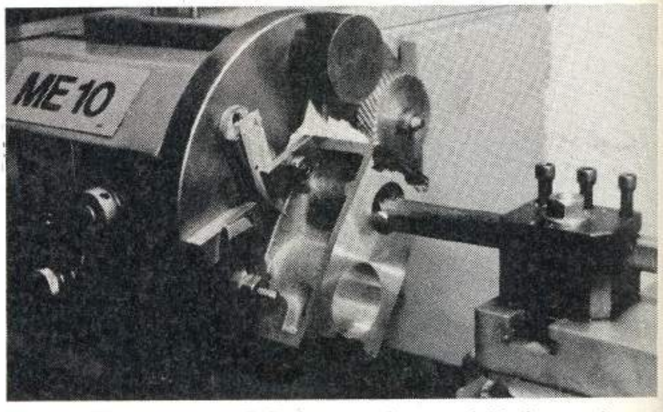

Fig. 5: Boring the I.P. cylinder whilst it is mounted on the faceplate. The lathe used here is the Boxford ME10.

After marking out the ports, much of the metal may be removed by drilling rows of holes, the operation being completed by end-milling. Although a milling machine was available, I elected to carry out this operation in the lathe since the setting up appeared easier. The block is packed up on the boring table so that the mid depth of the block is at centre height, and the exhaust ports milled. Fig. 7 shows the work in progress. While packed up at this height, the 7/16 in. × 26 t.p.i. and 3/8 in. × 26 t.p.i. holes for the L.P. and I.P. exhausts respectively may be drilled and tapped, and the inclined passageways leading to the ports may be drilled as shown in Fig. 8.

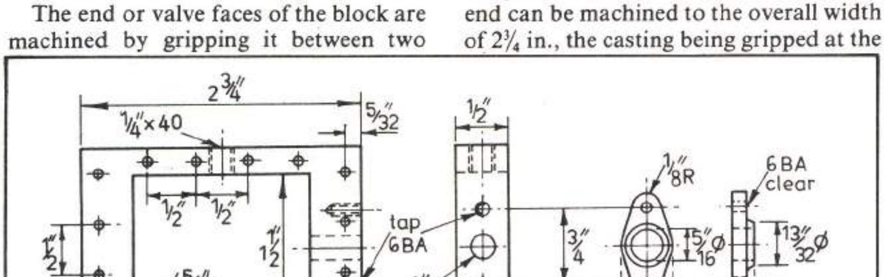

L.P. STEAM FLANGE:
1 off brass

L.P. VALVE CHEST 1 off g.m.

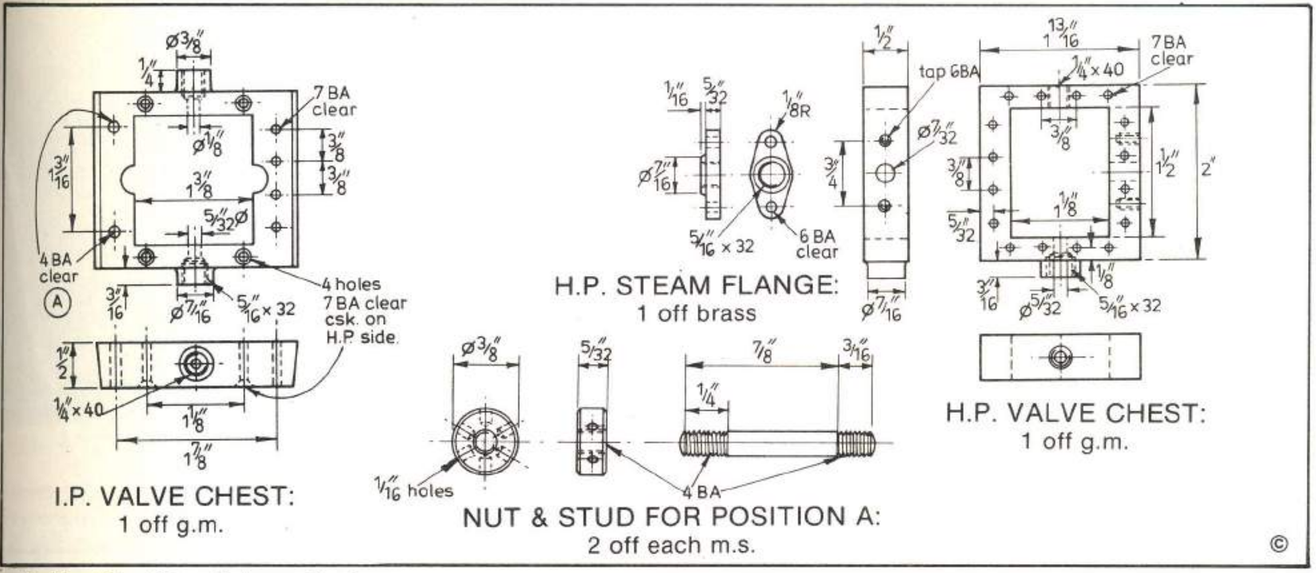

Incidentally this photograph shows clearly the tinplate swarf collector which I use on all possible occasions. I am sure that this feature — advocated in the *Model Engineer* many years ago by Duplex — has contributed to the fact that the bed of the lathe, which was purchased new in 1956, shows no appreciable signs of wear although the lathe has been used for machining many cast iron components.

To provide starting points for the drilling of the passages from the cylinder ends to the steam ports, I used a circular table on the vertical miller to machine curved recesses $5/32$ in. wide × $1/8$ in. deep at the ends of the bores, but if the necessary equipment is not available, the more usual, but in my view less effective, method of filing may be employed.

In model triple expansion engines, the joining together of the cylinder blocks and I.P. valve chest creates problems since the space that the designer has allocated for nuts and studs is invariably occupied by over generous fillets in the casting. Reference to the drawing shows my solution in which $1/2$ in. deep recesses were milled in the block immediately behind the I.P. port face. I used a small ($3/16$ in. dia.) end mill for this purpose in order to provide a sufficiently flat surface for seating the nuts. On the side remote from the exhaust outlet, the recess extends for the full depth of the block between top and bottom flanges, but on the exhaust side two separate recesses are necessary. I found that this treatment of the problem provided sufficient space for the necessary nuts and, what is equally important, for a means of tightening them.

The final operation on the block at this stage is the drilling and tapping of the $3/16$ in. × 40 t.p.i. holes for the drain cocks. These holes are drilled in a direction perpendicular to the engine centre-line,

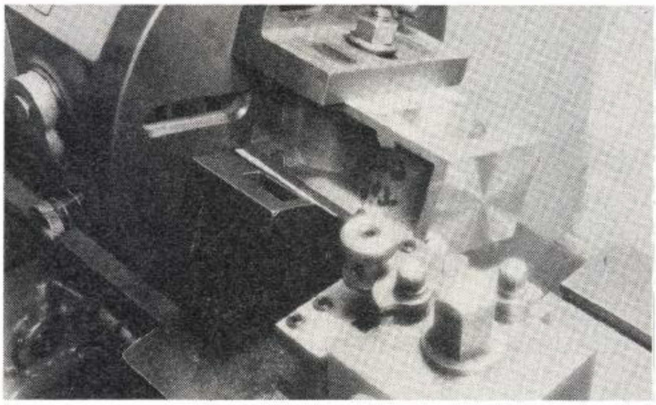

Fig. 6: Gripping the cylinder block between two angle plates to machine the end face.

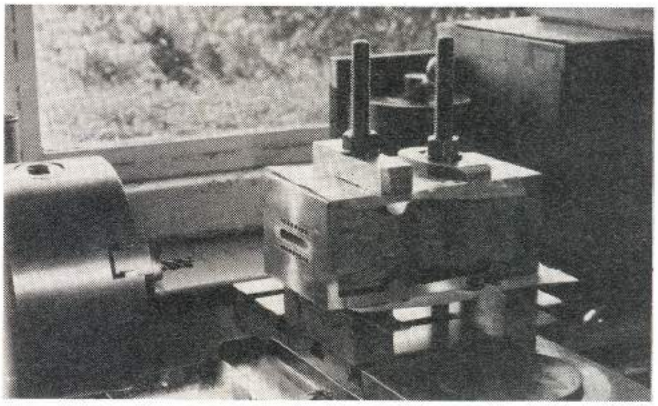

Fig. 7: The port milling set-up used by the Author.

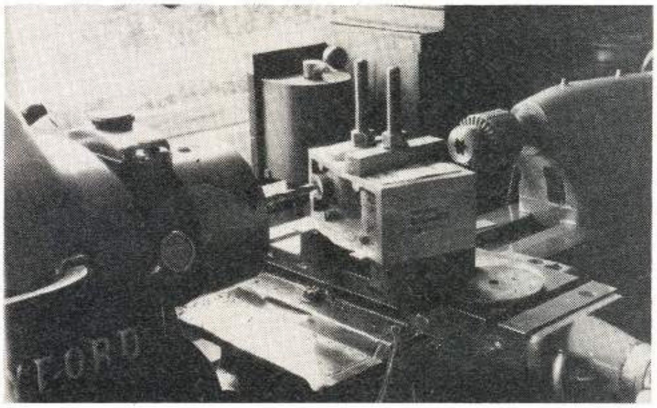

Fig. 8: Drilling the passageways leading to the ports.

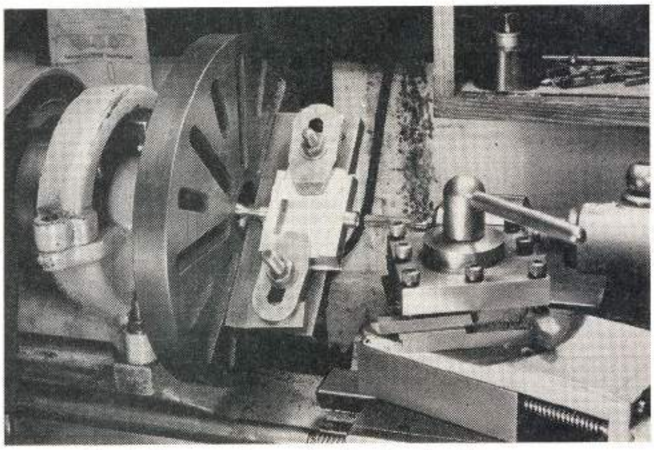

Fig. 9: The set-up for tapping for the tail guides.

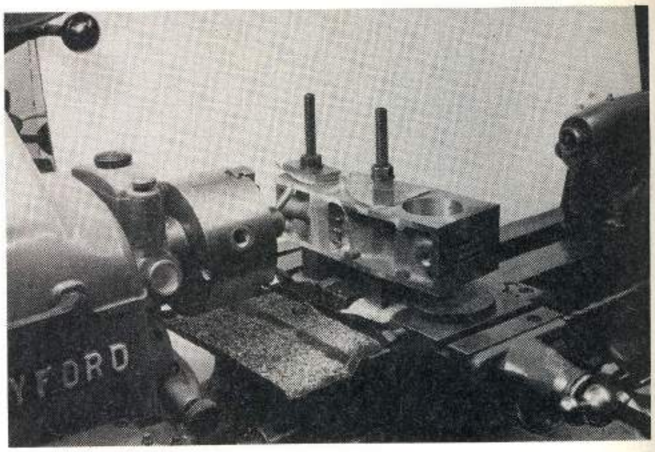

Fig. 9a: Using a fly-cutter to machine the side faces.

appropriate seatings being made with an end mill, and only extend to a depth of $\frac{1}{4}$ in. The connection to the cylinder bores is made with $\frac{1}{16}$ in. dia. follow up holes, angled so that they pierce the bores of the cylinders at $\frac{3}{32}$ in. from their upper ends. In order to position all main controls on one side of the engine, the drain cocks are fitted on the side remote from the condenser.

High Pressure Cylinder Block

The general machining processes are similar to those for the previous block so that detail descriptions are unnecessary. The only unusual feature is the drilling of the exhaust passages leading to the I.P. valve chest. The transverse passage is drilled right through the block and its ends are finally plugged with $\frac{7}{32}$ in. × 40 t.p.i. brass plugs; it is advisable to carry out this cross drilling before milling the exhaust port, to avoid the possibility of the drill wandering. For both cylinder blocks, it is important to mark the bottom face of each block (i.e. the face machined at the same setting as that used for boring the cylinder), to avoid the possibility of embarassing mistakes at the stud drilling stage.

Although described individually, it makes production sense to group the machining processes for the two blocks where possible e.g. port cutting and drilling, drilling and tapping for cylinder drains etc.

Low Pressure and High Pressure Valve Chests

Since these differ only in width, they may be considered together. After general cleaning up and filing the inside cavity to the correct dimensions, the casting is gripped in a 4-jaw chuck and the back and front faces machined to bring the total thickness to $\frac{1}{2}$ in. in each case.

When dealing with valve chests in which the valve rod has a tail guide in the top face of the chest, alignment of the valve rod holes always presents a problem. Since in the present design the tail guides are separate items, the appropriate holes can be drilled in the valve chests, working from either end, and thus the alignment of the holes is more readily assured than if all the drilling takes place from the lower gland hole.

The method I usually employ is to carefully mark out and deeply centre pop the positions of the valve rod on the top and bottom of the valve chest which is then mounted, gland outwards, between centres on the lathe, a faceplate having previously been mounted on the mandrel. An angle plate is then offered up to the valve chest and to the faceplate and firmly clamped to both, after which operation the tailstock centre may be withdrawn. The gland boss and the lower face of the valve chest may now be turned and drilled and tapped for the valve rod and gland. The gland hole is then slightly countersunk to provide a true location for the headstock centre when the casting is turned end for end preparatory to machining the top face and drilling and tapping $\frac{1}{4}$ in. × 40 t.p.i. for the tail guide. Fig. 9 shows the set up for this operation which actually illustrates the centre or intermediate pressure valve chest which has an integral gland at either end.

The same faceplate/angle plate set-up may be used for finishing the sides of the chest which may, for this purpose, be attached to the angle plate by a single central bolt and clamp plate. Accuracy of the finished job may be assured by setting the already machined top and bottom faces square to the faceplate. Although at present symmetrical, the valve chests will cease to be so when all holes have been drilled and it is suggested that some identification be placed on their bottom faces to denote which side will be assembled next to the cylinder block.

Next, the 7 BA clearing holes for the securing studs should be marked out and drilled, taking care to locate these as accurately as possible since the valve chests will serve as jigs for locating holes in both cylinder blocks and valve chest covers. When drilling the holes, the work should be held truly in a machine vice to ensure that the holes are drilled squarely. Apart from the obvious danger of holding work 'freehand' for drilling, there is a strong tendency for work which is not securely clamped to tilt slightly under drill pressure, producing out of square drilling.

Intermediate Pressure Valve Chest

Most of the above remarks apply also to the central valve chest, but particular care must be taken to ensure that the front and rear faces are parallel within close limits, otherwise alignment problems will arise at a later stage. The sides of the casting may be left unmachined for the time being, the surfaces being levelled after assembly of the block.

The attachment holes are of necessity less straightforward than before. Firstly there are two 7 BA clearance holes at the top and the bottom edges of the chest; these are countersunk on the side facing the high pressure cylinder. Their purpose is to take screws securing the chest to the I.P. valve face so that the chest may be located in its correct position while setting the I.P. valve. The four 7 BA clearance holes shown on the right hand side of the chest drawing are for studs to be screwed into the H.P. cylinder block, and projecting into the previously mentioned recess behind the I.P. valve face on the side remote from the exhaust exit. The two 4 BA clearance holes on the left hand side of the drawing serve a similar purpose on the side adjacent to the I.P. exhaust exit. This position is marked 'A' on the drawing, and the special nuts and studs are also detailed.

This is a convenient stage at which to erect the cylinder blocks and the I.P. valve chest for the purpose of machining their common side faces; I did this by bolting the assembly to the lathe boring table and traversing it across a fly-cutter as shown in Fig. 9a. *To be continued*

A Marine Triple Expansion Engine

The O. B. Bolton design updated by J. P. Bertinat

Part III From Page 314

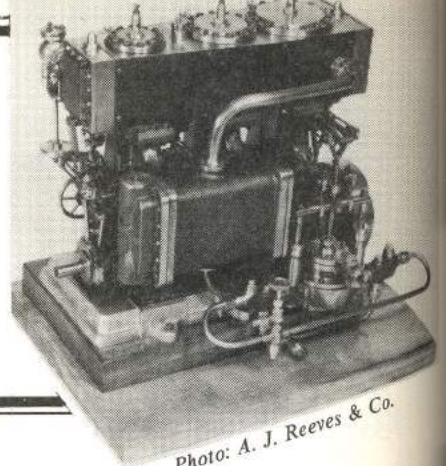

Photo: A. J. Reeves & Co.

Certain of the drawings mentioned in this issue were included with their major components in our 20 September issue. This time we deal with the cylinder covers.

Gland Nuts, H.P. & L.P. Tail Guides, Steam & Exhaust Flanges

The valve gland nuts can be made from brass or gunmetal bar, and care should be taken to obtain fairly tight threads to minimise the risk of their coming adrift in service. Wherever possible, I prefer to screwcut these threads to ensure concentricity and alignment. I have shown round slotted heads for the glands, but they may be made from hexagon bar if preferred. The two tail guides are turned from $\frac{3}{8}$ in. A/F hexagon brass or gunmetal bar. After forming the $\frac{3}{4}$ in. × 40 t.p.i. thread and the $\frac{1}{8}$ in. dia. hole for the valve rod, they are held on an internally threaded mandrel for turning the top end.

The oval steam flanges are again machined from brass or gunmetal, that for the low pressure valve chest having a plain bore of $\frac{5}{16}$ in. into which the transfer pipe is finally silver-soldered, while the high pressure flange is threaded $\frac{5}{16}$ in. × 32 t.p.i. for the main steam valve or lubricator tee piece. The 6 BA clear attachment holes are spotted through to the appropriate valve chests and, again, dimensional accuracy is required to avoid fouling of the various drillings in the valve chest. The portions of the circular exhaust flanges which screw into the cylinder block should have their threads on the tight side, but should not be screwed fully home until final erection and after the lagging has been fitted.

Top Covers

These are provided with chucking pieces which I elected not to use, so the first operation was to remove all but about $\frac{1}{8}$

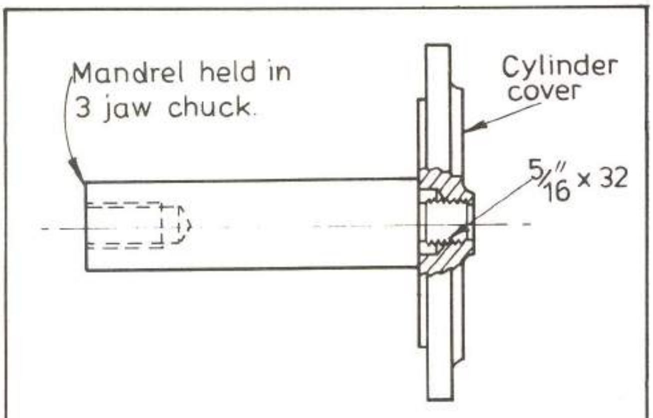

Fig. 10 FINISHING TOP COVERS

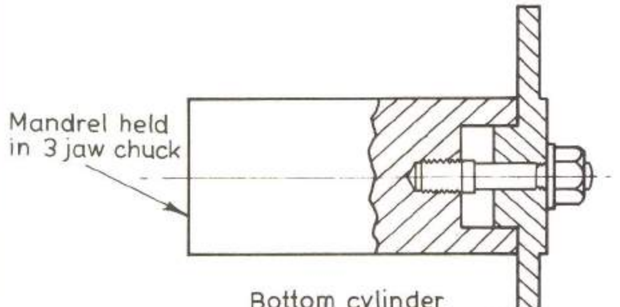

Fig. 12. BOTTOM COVER TURNING FIXTURE

©

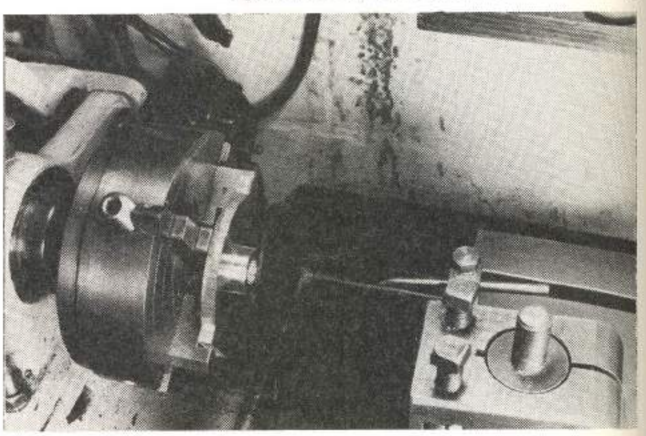

Above, Fig. 11: Boring the bottom cover in the lathe.
Below, Fig. 13: Turning the bottom cover on a spigot to ensure concentricity.

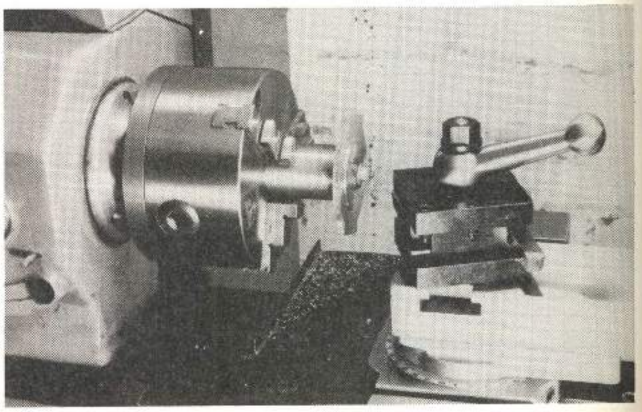

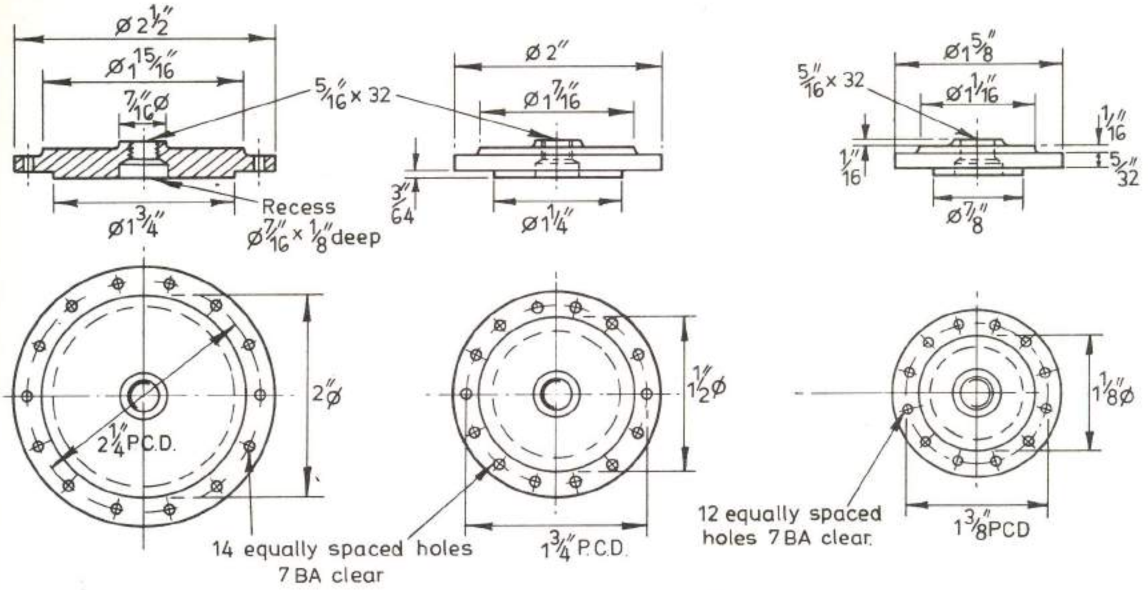

TOP CYLINDER COVERS: 1 off each g.m.

BOTTOM CYLINDER COVERS: 1 off each g.m.

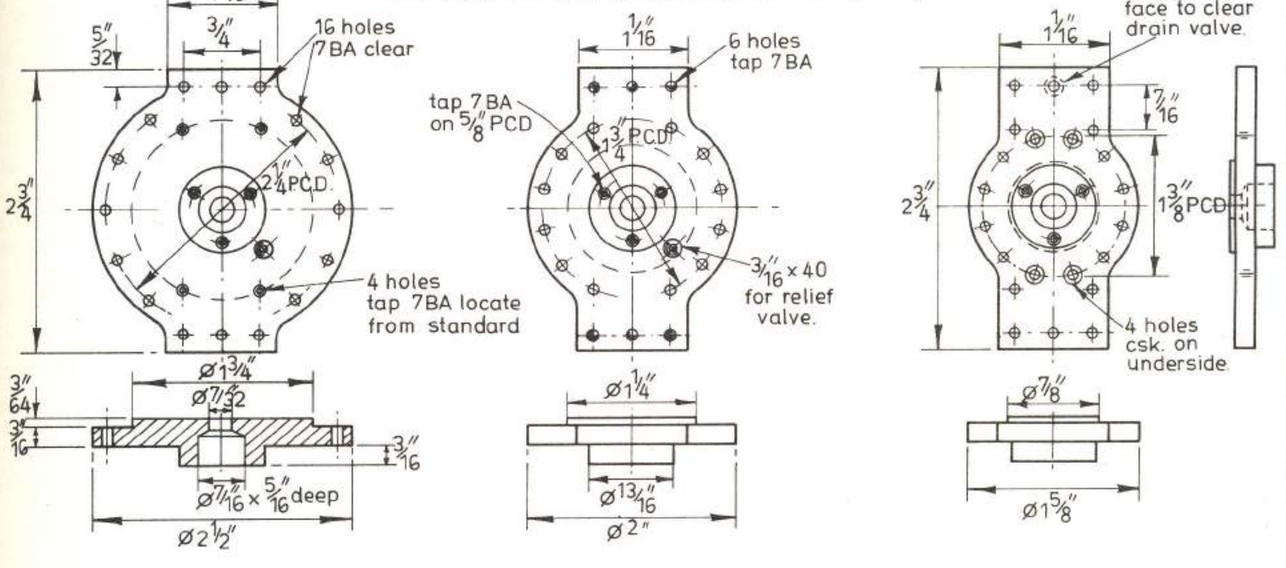

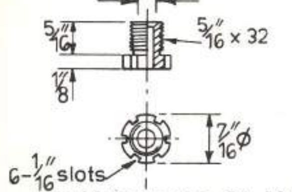

VALVE ROD GLAND
3 off brass

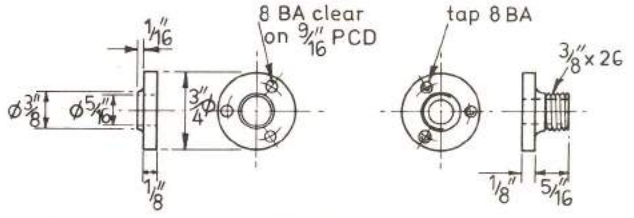

I.P. EXHAUST FLANGE:
1 off each part, brass

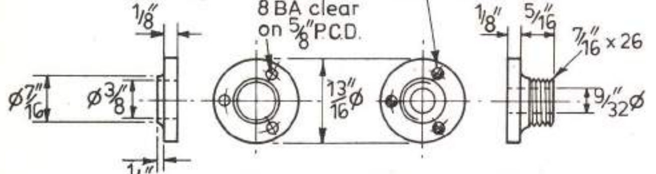

L.P. EXHAUST FLANGE:
1 off each part, brass

©

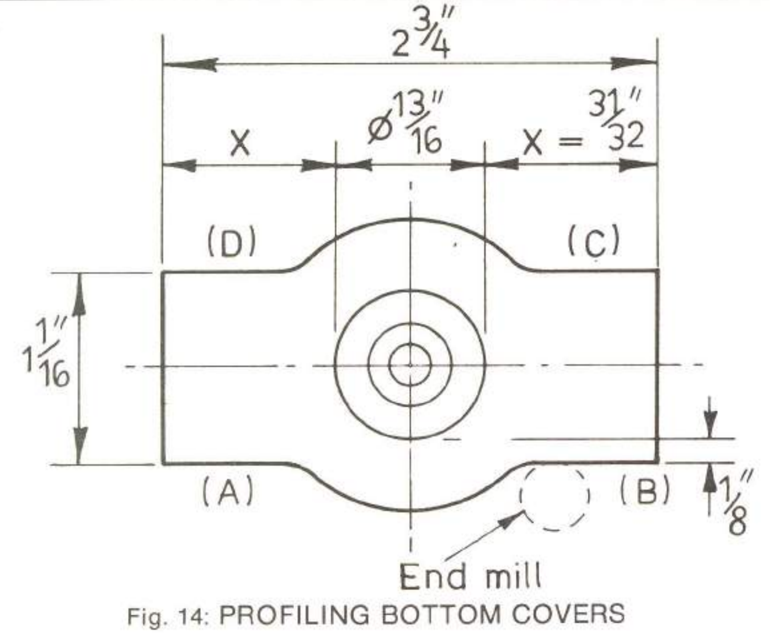

Fig. 14: PROFILING BOTTOM COVERS

in. of these, this projecting portion ultimately forming the raised boss at the relief valve tapping. A cover was then gripped, plain side out, in a 4-jaw chuck, the work projecting sufficiently from the chuck to enable the locating spigot to be turned. After facing and turning the $^{3}/_{64}$ in. deep spigot to fit the cylinder bore, the casting is centred and a $^{5}/_{16}$in × 32 t.p.i. tapping drill (letter J or 7mm) put right through the cover. A counterbore $^{7}/_{16}$ in. dia. × $^{1}/_{8}$ in. deep is then formed to clear the nut securing the piston to its rod and the remainder of the hole is then tapped $^{5}/_{16}$ in. × 32 t.p.i.

For turning the top faces and outside edges of the covers, I use a stub mandrel threaded $^{5}/_{16}$ in. × 32 t.p.i., this mandrel being turned from at least $^{5}/_{8}$ in. dia. material to provide an adequate register flange for the covers. I have, over the years, made up a selection of these mandrels to cover most of the M.E. threads; once removed from the chuck, they cannot be relied upon to produce perfect concentricity, but they are adequate for most purposes. Fig. 10 indicates the set up.

Note that the relief valves may be regarded as optional extras in the model and if constructors do not wish to drill right through the top covers, the piston nut recess may be deepened slightly and tapped, say, $^{1}/_{2}$ in. × 26 t.p.i. to accept a stub mandrel having a suitably shortened thread. The final operation on these covers is the drilling of the holes for the 7 BA fixing studs; this is an operation for which a form of dividing head is a boon. When spotting holes from the covers to the cylinder block, care should be taken to ensure that the holes span the drain cock positions; if the holes are located at the radii drawn, they should clear the steam passage recesses.

Bottom Covers

The machining of these bottom covers requires great care to ensure that they match the standards or columns accurately and the centre distances are maintained. The first operation (after discarding the chucking spigot) is to mount the cover in a 4-jaw chuck such that its entire underside can be machined and the gland formed; this is shown in Fig. 11. With care, the piston rod bore ($^{7}/_{32}$ in.) will come true if drilled and reamed, but the gland bore should be finished with a small boring tool as in Fig. 11. The outside diameter of the gland boss is turned to $^{13}/_{16}$ in. + 0 — 0.001 in., this accuracy being required for subsequent location and measurement.

Next a chucking fixture is made up in a 3-jaw chuck as shown in the diagram (Fig. 12). The recess in this fixture is bored a close fit for the gland bosses and a central spigot is then fitted and turned in situ to fit the piston rod hole. With the covers mounted on this fixture, their upper surfaces may be turned and spigotted to fit the bores, with the certainty that both sides of each cover are concentric to one another. Fig. 13 shows the set-up in use. The 'wings' by which the cylinder covers and standards are connected need to be machined accurately to width and symmetrical with respect to the cylinder bore. Having a rotary table for my miller, I proceeded as follows:- ref. Fig. 14).

1) Plug gland with short stub of $^{7}/_{16}$ in. b.m.s., centred to take divider point and mark out circular section of cover.
2) Clamp cover to rotary table, raising cover by about $^{1}/_{4}$ in. on parallel strips and centralising with a stepped spigot locating in centre bore of table and in piston rod holes. (Fig. 15).
3) Adjust the table crosswise until the cutting edge of the end mill is $^{1}/_{8}$ in. from the gland boss circumference (setting is easier if a 0.002 in. feeler blade is added to a $^{1}/_{8}$ in. parallel strip and the table moved a further 0.002 in. to compensate when the correct 'feel' is obtained).
4) Proceed to mill edge (A), starting from the outside and feeding until marked out circle is reached.
5) Machine circular section by rotating the table until the commencement of edge (B) is reached.
6) Withdraw cutter vertically, return table to initial angular setting and machine edge (B).
7) Withdraw cutter vertically, rotate table 180 deg. and repeat items 4 — 6, thus finishing edges (C) and (D).

Fig. 15: Using the rotary table to profile the bottom cylinder cover.

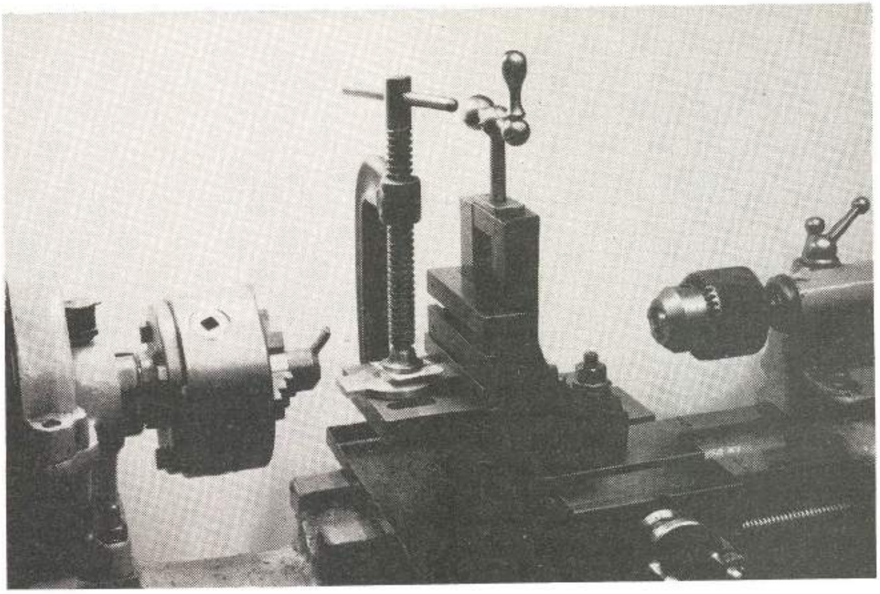

Fig. 16: Machining the end face of the cover using the vertical slide on the lathe and a fly-cutter.

If the miller and rotary table are not available, the circular part can be completed by the time honoured method of filing, and the straight sections only milled, using lathe and vertical slide. For this purpose, the vertical slide is set up facing the lathe chuck and the work is clamped to the slide table (using ¼ in. packing as before) with the 'wings' of the cover horizontal. The end mill is held in the lathe chuck and the vertical slide adjusted so that the cutting edge is ⅛ in. above or below the circumference of the gland boss. If using this method, do make sure that the work and slide are in such a position that the cutter is able to travel the full width of the work; it can be very annoying (or even worse) to get 80% through a cut when you find you have come to the end of the cross slide travel.

The end faces of the covers now have to be machined to bring the overall width to 2¾ in., again symmetrical with respect to the cylinder bore. This is readily achieved by working from the gland circumference again, making the distance 'X' $^{31}/_{32}$ in. (Fig. 14) as accurately as available equipment will permit (i.e. working from leadscrew handwheel graduations). For this operation I used a vertical slide/angle plate set up as shown in the photograph (Fig. 16), the actual cutting being performed by a carefully honed fly-cutter. Incidentally, the rather hefty looking vertical slide on the Drummond lathe will be recognised by readers of long standing as a pre-war Tom Senior product; it cost in the region of £2/10s. and constituted my sole provision for milling for many years.

The last, but not least important, operation on the lower covers is the drilling of the various holes, the spacing of which is important since the covers provide drilling jigs for the cylinders and standards. In the low pressure cylinder cover, all but four of the fixing holes are straightforward, and can be marked out and drilled 7 BA clear for later spotting through to the cylinder block and to the standards. The remaining four must be marked out later from the standard and are tapped blind holes in the cover; if further extended, they would break into the edge of the cylinder bore.

In the Intermediate pressure cover, the twelve holes at 1¾ in. p.c.d. are drilled 7 BA clear, four of these holes being so positioned that they will serve as attachment points for the standard. The six holes at the ends of the 'wings' will need to be tapped 7BA for the attachment of the standard; their proximity to the edge of the cylinder block precludes the studs being extended into the latter component. It might be considered desirable at this stage to withhold the tapping of these holes until they have been utilised to spot through the holes in the standard, to avoid the possibility of damaging the threads.

For the high pressure covers four of the cylinder mounting holes on the 1⅜ in. p.c.d. are countersunk to clear the top faces of the standards. The ten holes for the attachment of the standards may all be drilled 7BA clear since the inner four fall comfortably within the cylinder block and the fixing studs may be tapped into the latter, while the outer six are clear of all obstructions and plain bolts may be used. As indicated on the drawing, the centre of these holes will need to be countersunk on the upper face on the drain valve side of the engine in order to clear said drain valve.

The holes for the gland studs, although dimensioned, will obviously be located from those in the glands. Finally on the I.P. and L.P. covers, $^{3}/_{16}$ in. × 40 t.p.i. tapped holes are indicated for the fitting of relief valves if desired.

On full size engines, relief valves are usually provided and are, in fact, a must if piston valves are used instead of slide valves, and serve to protect the cylinders from excessive pressures. The I.P. and L.P. cylinders of large engines are not designed to withstand full boiler pressure, and if excessive steam leakage were to occur at the high pressure stage, pressure in the L.P. cylinder might become excessive. There is also the problem of water being trapped in the clearance space during the warming up period or if priming takes place in the boiler. When starting up this water is cleared via the manually operated drain valves, but additional protection is given by the automatic relief valve. *To be continued*

MEAN MACHINES

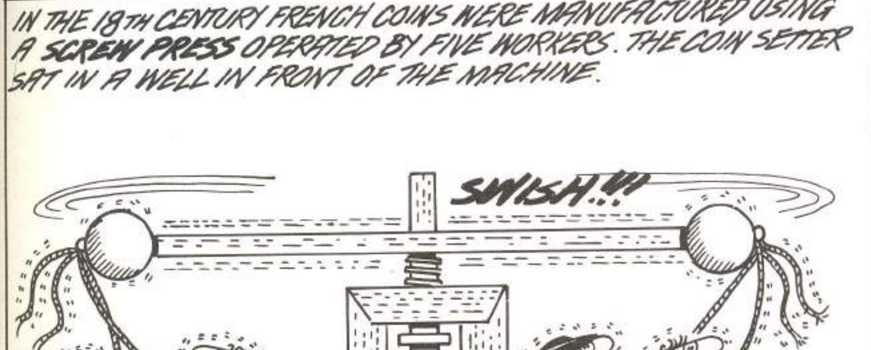

IN THE 18TH CENTURY FRENCH COINS WERE MANUFACTURED USING A SCREW PRESS OPERATED BY FIVE WORKERS. THE COIN SETTER SAT IN A WELL IN FRONT OF THE MACHINE.

A Marine Triple Expansion Engine

The O. B. Bolton design updated

by J. P. Bertinat

Part IV From Page 453

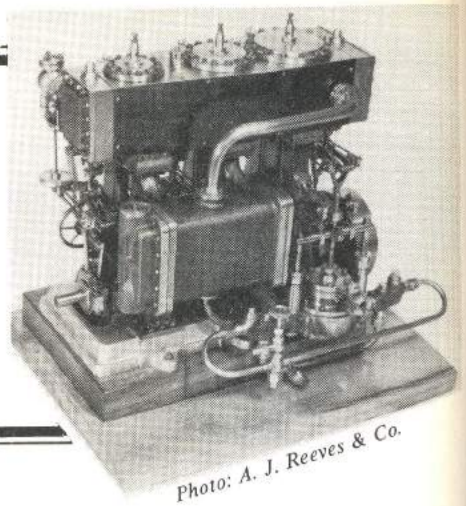
Photo: A. J. Reeves & Co.

Builders are informed of a small tracing error which has been noticed in Part II. In the plan view of the block a dimension reads "Drill thro' $\frac{3}{16}$ in. and tap $\frac{7}{16}$ in. × 40 t.p.i. This should read "and tap $\frac{7}{32}$ in. × 40 t.p.i." Apologies for the error. In this issue we have shown Fig. 18 for reference, the text will follow next time.

Mounting of Bottom Covers on Cylinder Blocks

When spotting through the holes from these covers onto the cylinder blocks, it is essential that the 'wings' to which the standards will later be attached are correctly aligned with their axes at right angles to the engine centre-line. To ensure that this was correct, the blocks and I.P. valve chest were assembled and the assembly stood on a surface plate, resting on the L.P. valve face. A square was then applied to each side in turn, and the ends of the wings, which are all $2\frac{3}{4}$ in. wide were lined up to this square. As an additional check, the distances apart of corresponding corners of adjacent wings were measured on *both* sides of the block. The distances should of course correspond to cylinder centre distances, and only when the figures for both sides of the block were equal, were the covers clamped to the block and the holes spotted through. To avoid possible erection errors at a later stage, I usually mark with a 'v' the edge of the cover which is assembled adjacent to the valve face.

Valve Chest Covers

In comformity with large scale practice, these covers have raised centres with corresponding cavities on their inner faces. Chucking pieces are provided on the castings, but I prefer to grip the covers by their edges in a 4 in. 4-jaw chuck for the purpose of machining the front and rear faces. Parallelism of the two faces is assured by setting the work with parallel strips (short lengths of b.d.m.s. are adequate for this purpose) resting against the chuck face; do not forget to remove these strips before starting the lathe! If desired, the rebate in which the securing nuts fit could be levelled by filing, but I used the vertical miller, the work being supported, outer face uppermost, on parallel strips in a machine vice. By manipulation of the longitudinal and cross feed screws in turn, the four rebates on each cover were cleaned up at a single setting with the certainty that the raised section finished up a true rectangle.

Next the fixing holes are jig drilled from the valve chest, making sure that the latter is clamped with its correct face against the cover. While thus clamped, the profile of the cover can be scribed from the chest and the cover subsequently trimmed to size. In my larger engines I usually proceed in a different manner in that I first face both valve chest and cover and then drill the fixing holes in both components. I then turn up three or four short dowel pins to be a tight push fit in the holes previously drilled. These pins enable the chest and its cover to be dowelled together, subsequent to which they are machined as a single unit. This procedure ensures that the outside profiles of both chest and cover match exactly and saves considerable time normally spent on matching these, using a trim and try again procedure.

Piston Rod Glands

These are cast as a single stick and I suggest that the first operation is to separate the three glands. A gland is then gripped in the 4-jaw chuck, boss outwards and with just sufficient flange projecting to enable the boss and upper face to be machined. At this setting, the boss may be turned to its $\frac{7}{16}$ in. dia. and faced to $\frac{1}{4}$ in. long, the piston rod hole drilled and reamed $\frac{7}{32}$ in. dia. and the edge of the hole countersunk. To ensure accuracy of the piston rod hole, I would open out the hole to say $\frac{13}{64}$ in. with a drill, check for run-out with a Verdict type indicator and correct if necessary with a small boring tool before finally sizing with a reamer.

When all three glands have reached this stage, they are mounted by the finished boss in a 3-jaw chuck and the lower end face and periphery are brought to size. Now, using a dividing head if available, the three 7BA clearance holes are drilled and spotted through to the appropriate cylinder cover.

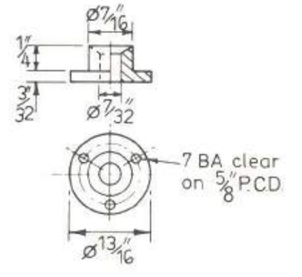

PISTON ROD GLAND: 3 off g.m.

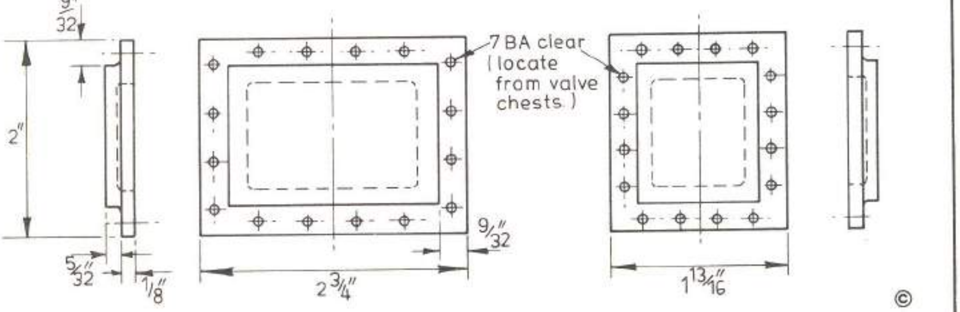

VALVE CHEST COVERS: 1 off each g.m.

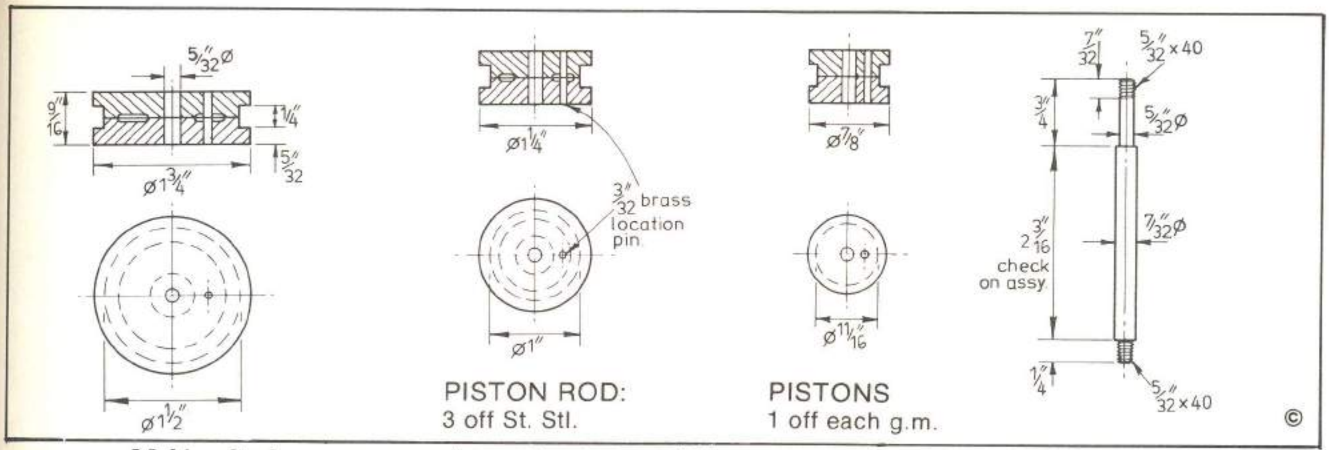

PISTON ROD:
3 off St. Stl.

PISTONS
1 off each g.m.

Making Studs

When describing the above cylinder assembly, I have made no specific mention of stud lengths. I usually measure these up from the job and make up in batches as required from bms rod of the appropriate diameter. This raises an immediate problem because although 7BA and 5BA studs can be made up from 3/32 in. and 1/8 in. rod respectively, material for 4 & 6BA studs is not easily available; the only 6BA (0.11 in. dia.) bms I have succeeded in obtaining was from the scrap bin of a steel stockist who assured me that the material was unobtainable!

My method is to turn down a length of rod sufficient for a batch of studs from the nearest larger size of bar, supporting the work with a travelling steady and later with a bush in the tailstock chuck. This is a job I could safely trust to the Drummond while I got on with something else, since the feed could be set to cut out when the tool approached the chuck. An alternative method for diameter reduction, suggested by a clockmaking colleague, is to feed the bar through a hollow end mill of appropriate bore.

Studs are awkward customers to hold for the finishing operation. I find it best to form a thread about 1½ diameter long on the 'short' end of the stud (i.e. on the end which will be permanently screwed into the work). The stud is then cut to length, this length being measured from the end of the thread already formed; it is then held in a split threaded collet for trimming the second end and threading for the nut. With care, working in this order produces studs which are of uniform length when screwed home; the length of the second thread is not critical. For long studs, the split collet is not necessary since there is sufficient material between the threads to permit normal gripping in the lathe chuck.

For those workers who do not wish to spend time making up studs, I note that at least one well known model engineering supplier lists quite a range of BA studs.

The Pistons

These are of split construction to enable hard brass or gunmetal piston rings to be fitted without risk of distorting the rings. The two sections of the piston are registered by their close fit on the piston rod and by a brass dowel pin which should be a press fit in one section of the piston and a clearance fit in the other. The first operation is to mount a casting in a 4-jaw chuck and machine both the chucking spigot and the outer face; careful setting up is necessary since machining allowances on the diameter are not excessive.

After all six castings have been so treated, we can change to a 3-jaw chuck, mounting the work by its machined chucking spigot and completing the initial machining, i.e. facing, drilling and reaming piston rod hole, turning the piston ring groove and turning the outside diameter to about 0.010 in. larger than the cylinder bore. It is advisable to relieve the faces of the central bosses by about 0.0005 in. to ensure that, when bolted together, the sections of the piston bed together firmly at their rims. The chucking spigot is now removed and, with the casting carefully gripped by the half piston ring groove, a final cleaning up cut is taken over the outer face.

With the two halves of the piston assembled on a piece of 5/32 in. dia. silver steel, the brass dowel pin is fitted and we are now ready for the final turning to fit the cylinder bore. For this purpose the piston is mounted on a 5/32 in. dia. mandrel which has been turned in situ and which has its end threaded to accept a 5/32 in. x 40 t.p.i. nut. Some would recommend using the actual piston rod for this purpose, but I prefer something more rigid, turned from, say, ½ in. dia. bms, thus providing a substantial shoulder against which the two halves of the piston may be clamped while being skimmed to size. The piston should be made a good sliding fit in its cylinder and, when first made, the engine should operate perfectly without piston rings.

Were I starting from scratch, I would advocate a slightly different design of piston in which the concentricity of the two parts was assured independently of their fit on the piston rod. The two sections of the piston would be joined together by, say, three screws. Fig. 17 gives some idea of the proposed alternative construction, the diagram being to scale for the low pressure piston.

To be continued

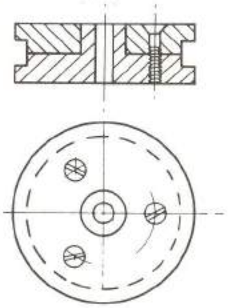

Fig. 17
ALTERNATIVE
PISTON
CONSTRUCTION

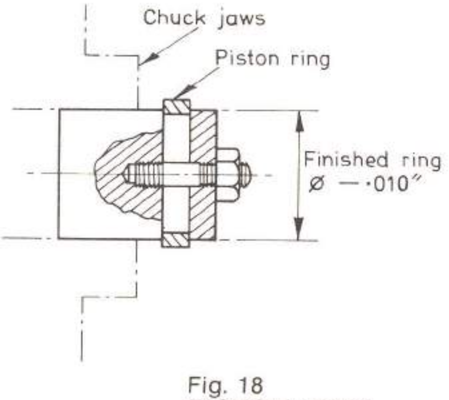

Fig. 18
PISTON RING
FINISHING
FIXTURE

A Marine Triple Expansion Engine

The O. B. Bolton design updated by J. P. Bertinat

Part V From Page 571

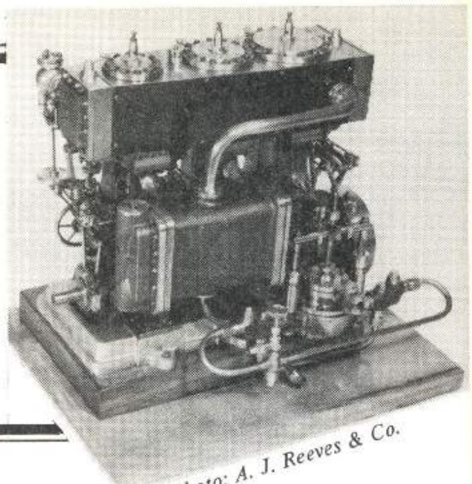

Photo: A. J. Reeves & Co.

Apologies to builders, an error has found its way into Part IV of this series. The error was on Page 571 of the 15 November issue, when the piston rod and piston captions to the drawings were transposed. Our apologies for this regrettable error. In fact we deal with the piston rods in this instalment.

Last time we dealt with the construction of the pistons, the bottom covers on the cylinder blocks and the piston rod glands. This time we progress to the making of the piston rings, rods and the lower valve rod guide. Thence to the slide valves and buckles for the engine.

Piston Rings

These are called for in the original design and I have retained them, one wide ring per piston being used. For gunmetal cylinders a non-ferrous ring is desirable, ordinary hard brass rod (definitely not brass tube), cast gunmetal or phosphor bronze being suitable. The blanks for the rings are turned from bar of suitable size to an outside diameter 0.070 in. larger than the finished diameter, and bored to leave a radial thickness of about 0.10 in. (allowances on the smaller high pressure piston may be slightly less).

After parting off, the faces of the blanks are lapped (I use a flat 'India' stone for this purpose) so that they are an easy but not sloppy fit in the piston when the two halves of the latter are clamped together. The next operation is to split or gap the rings; for this purpose a ring is carefully held in a vice with smooth parallel jaws (a machine vice is ideal — do not forget to interpose layers of paper to protect the lapped faces) and a 1/16 in. wide gap formed by careful sawing and filing, or better still by a slitting cutter in the milling machine.

A stub mandrel and washer are now prepared in a 3-jaw chuck. This fixture is shown in Fig. 18; the outer end of the mandrel and the washer are turned to about 0.005 in. less than the finished diameter of the piston ring. A piston ring is now clamped lightly in the fixture and the gap closed by means of a copper wire clamp, the ring is adjusted radially until it is about 0.030 in. eccentric with the high spot at the gap. The clamping bolt is now fully tightened, the wire removed and, by easy stages, the ring is turned to its finished diameter, i.e. a good sliding fit in the cylinder bore. Fig. 19 shows the turning fixture, the finished piston ring and the piston parts for the intermediate pressure cylinder.

Piston Rods

These are plain turning jobs using 7/32 in. dia. ground stainless steel rod. For accurate chucking and firm gripping I use a 4-jaw chuck in conjunction with a test indicator to obtain the necessary degree of concentricity. Care should be taken to ensure that the 5/32 in. dia. section is a good fit in the reamed piston holes. Some may prefer to leave the finishing of the lower ends of these rods until a later stage so that their length may be checked from the job. Very slight errors in height of standards, cover thickness, bearing position, etc. which, although insignificant in themselves, might possibly combine to produce a measurable change in piston rod length.

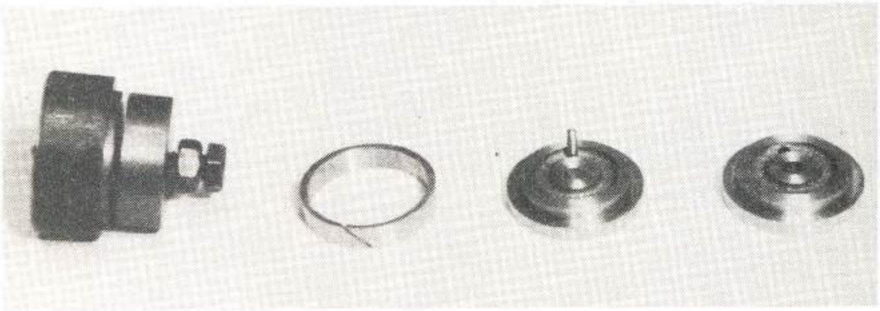

Above, Fig. 19: The turning fixture, piston ring and piston parts for the intermediate pressure cylinder.

Lower Valve Rod Guide

This small component fills an important role in that it relieves the gland of the considerable sidethrust produced by the link motion. At the time I made my engine, castings were not available for this part and I resorted to fabrication. If a built-up construction is employed, do not be tempted to simplify by omitting the central web since its absence will reduce the stiffness significantly, and the guide will tend to bind on the valve rod rather than support it. Before drilling the fixing holes, their position should be checked in relation to other holes in the valve chest; the fixing holes should just clear the main attachment studs.

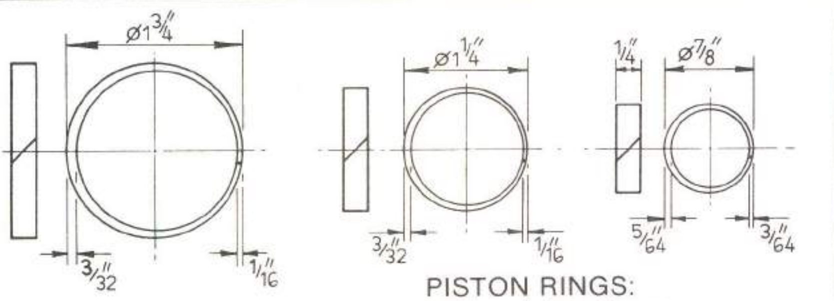

PISTON RINGS:
1 off each hard brass

©

Slide Valves and Buckles

These three valves come as a single casting, as do their buckles. Some machining could be carried out with the grouped castings, but I preferred to separate them at the outset and machine them by more usual methods.

The buckles may be reduced to their correct external dimensions and thickness by facing in a 4-jaw chuck; for the I.P. and L.P. buckles, the openings were bridged by inserting strips of bms between the work and the jaws, to avoid distorting the castings by chuck jaw pressure. The internal openings are finished to size by filing or with a $\frac{3}{16}$ in. dia. end mill; if using the latter, the corner radii may be left and the valves radiused.

The fronts of the slide valves are faced in the 4-jaw chuck and then the castings are reversed and faced to bring the overall thickness to $\frac{7}{16}$ in. The edges of the valves are milled, as are also the back spigots to be an easy fit in the buckles. Since I have increased the steam lap, there is very little machining allowance on the top and bottom edges of the valves so that extra care is required here. The valve castings come without an exhaust cavity which has thus to be cut from the solid using a $\frac{3}{16}$ in. end mill or slot drill; if only the former is available, the cavity must be started by drilling a series of holes to a depth of $\frac{1}{8}$ in.

The lower valve rod guide. It is stressed that builders should include the stiffening rib, failure to do this may well cause binding of the valve rod.

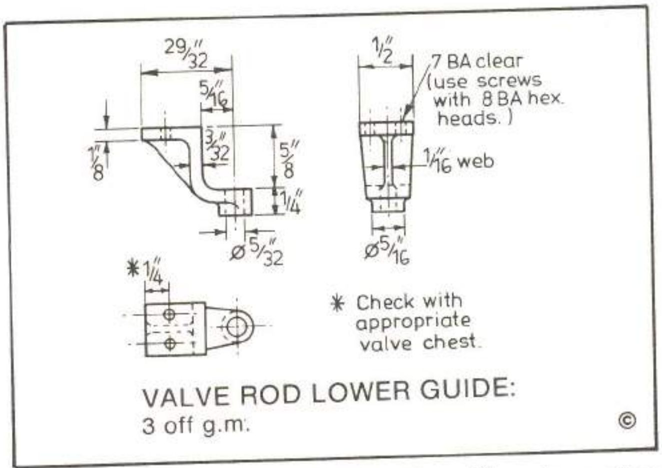

VALVE ROD LOWER GUIDE:
3 off g.m.

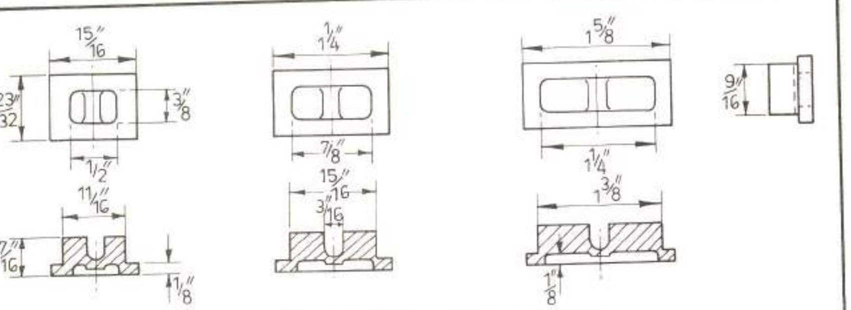

SLIDE VALVES: 1 off each g.m.

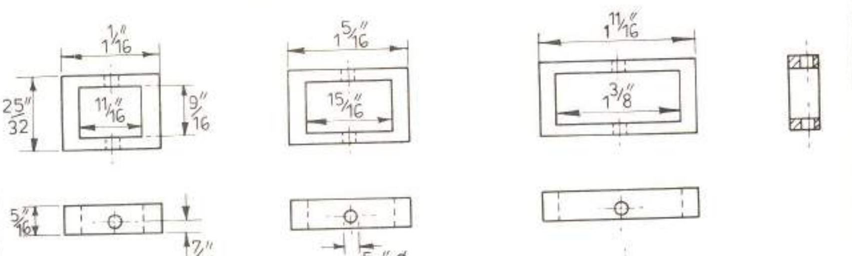

VALVE BUCKLES: 1 off each g.m.

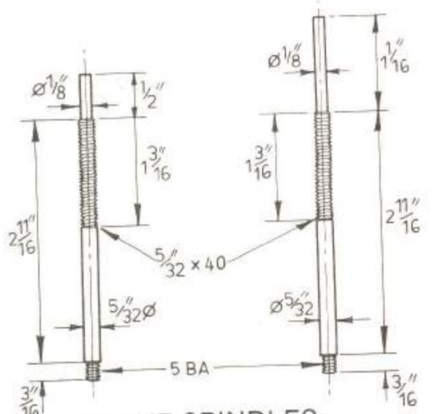

VALVE SPINDLES:
Stainless steel
L.P. & H.P. 2 off I.P. 1 off

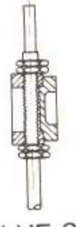

VALVE SPINDLE ASSEMBLY

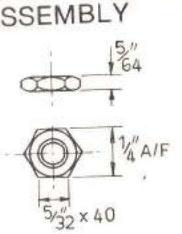

VALVE ROD NUT:
12 off m.s. or
st. steel

The valve rods are made from $\frac{5}{32}$ in. dia. stainless steel and present no problem; again I recommend the use of a 4-jaw chuck for holding the work since, although taking slightly longer to set up, the job is less likely to slip during the threading operation. The nuts by which the buckles are located on their spindles are of necessity rather thin due to space limitations. In the original design, the buckles appear to have been threaded on to the valve rods, with a single nut at each end. This clearly provides more room for the nuts, but the valve setting is less straightforward.

This completes all items directly connected to the cylinder block, and constructors can be assured that, apart from those necessary to attach the cylinder lagging, no more holes have to be drilled in the block or its covers. I usually make up and fit the lagging at this stage, subsequently setting it safely aside until final assembly. My engine is fitted with thin blued steel strip lagging obtainable from the same source as the castings. The lagging on each side of the cylinder assembly consists of a single strip 2 in. wide and extending the full length of the two cylinder blocks and the I.P. valve chest (approximately $7\frac{1}{4}$ in. overall length). Holes are made for the various pipes and valves and each strip is attached by eight 8BA brass round head screws. The material is spring tempered and not easy to drill; some constructors may prefer to make up a simple punch and die for making the holes, but I did not find this necessary — it takes far less time to sharpen a drill!

The next items to be tackled are the six main supporting standards and the integral condenser.

To be continued

A Marine Triple Expansion Engine

The O. B. Bolton design updated by J. P. Bertinat

Part VI From Page 693

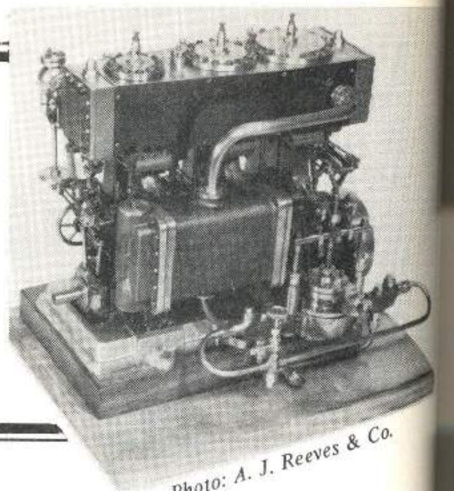

Photo: A. J. Reeves & Co.

Last time we dealt with the making of the piston rings, slide valve and buckles. This time we turn attention to the making of the columns and integral condenser.

Standards or Columns

Working downwards from the cylinder assembly, we now come to the standards or columns. On the drawing these are numbered 1-6, Nos. 2, 4, and 6 being on the front, or control side, of the engine whilst Nos. 1, 3, and 5 are on the rear, or pump and condenser, side, Nos. 3 and 5 being cast integral with the condenser shell.

Also detailed with the standards are the various bits and pieces which are attached thereto so that as many as possible of the mountings may be positioned at the most convenient stage. Contrary to normal engineering practice, no location pads are provided on the castings for these mountings (weighshaft bearings, reverse shaft bearings, pump rocker bearing and tail guide), so that great care is necessary is cleaning up the castings to ensure that flat seatings are provided, in order that a minimum amount of fitting and shimming is required. The castings come with an inward extension of the lower foot, indicated at "G" in Fig. 20 and, as with my machining sequence this was not required for holding purposes, the excess material was sawn off.

Dealing first with standards 1, 2, 4, and 6, the first problem is the establishment of a datum since, owing to pattern makers' draw, there are no parallel surfaces by which the casting can be firmly gripped. I chose to make the guide bar face my datum and used the vertical slide/angle plate set up to machine this face as shown in Fig. 21. Shims were placed between the casting and the angle plate to compensate for the taper in the casting, the vertical edges of the base and cap being squared up with the lathe bed; the two clamps by which the casting is secured to the angle plate can be arranged to cope with the taper on the upper face of the casting.

It is equally important to check the plan view location of the set up in all possible ways and I suggest:-(a) guide face parallel to chuck face; (b) base and cap of standard are parallel to lathe axis — checked by a square from the chuck face; (c) the outer edges of the caps checked to ensure that dimension K = $^{13}/_{16}$ in. (Fig. 20) may be obtained by machining equal amounts off both edges — checked by measuring from chuck face. Any necessary adjustments may be made by swivelling the vertical slide slightly, thus avoiding disturbance of the setting of the casting on the angle plate.

Note that on the front of the engine, three weighshaft bearings have to be fitted in alignment on standards 2, 4, and 6 respectively, so that the distance from the upper part of the machined guide bar face to the cast outer face of the standard (dimension "H" on Fig. 20) needs to be the same for each. I have dwelt at some length on the setting up procedure for these castings, but I am sure that readers will appreciate the need for care and accuracy since "mistakes cannot afterwards be rectified."

To machine the base and cap of the casting, I mounted the latter on a b.m.s. plate $2\frac{1}{4}$ in. × 2 in. × $\frac{3}{8}$ in. thick as shown in Fig. 20. The edges of the plate were carefully squared up, particular care being taken to ensure that the $2\frac{1}{4}$ in. long edges were truly parallel and that the plate was mounted symmetrically with respect to the centre-line of the casting. The plate was firmly secured to the already machined part of the casting by two $\frac{1}{4}$ in. BSF socket screws, so positioned that their holes would be finally covered by the guide bars and did not foul the fixing holes for said bars. We now have a unit which is easy to hold and locate for the final machining processes.

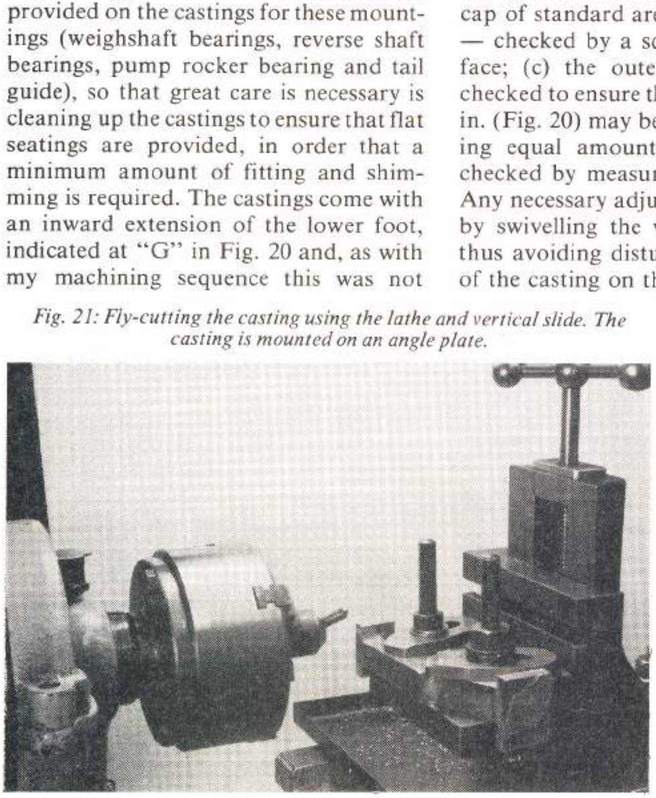

Fig. 21: Fly-cutting the casting using the lathe and vertical slide. The casting is mounted on an angle plate.

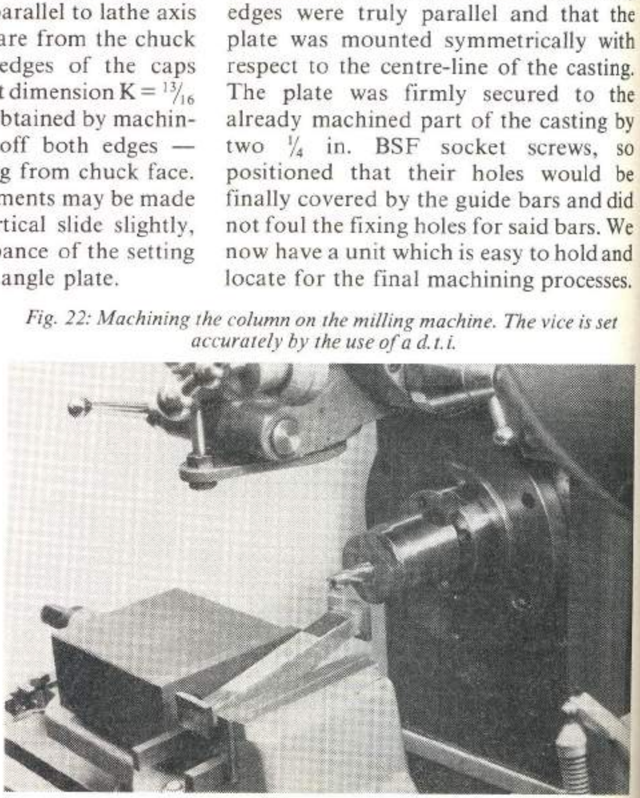

Fig. 22: Machining the column on the milling machine. The vice is set accurately by the use of a d.t.i.

The necessity for accuracy at this stage cannot be emphasised too strongly if troubles at the erection stage are to be avoided. The main requirements are:- (i) the top and bottom faces of the standard must be parallel and square with both the guide bar face and the centre-line of the standard; (ii) all six standards must be of the same length, preferably to micrometer or vernier measurements; (iii) the sides of the base and cap should be square with the guide bar face; (iv) the $1\frac{1}{16}$ in. width of the cap should be as accurate as possible to register with the lower cylinder covers, and should be symmetrical with respect to the centre-line of the standard. Detail methods of achieving this will vary according to equipment available, but careful measurement and checking of set-ups with a dial or "Verdict" type indicator are the order of the day.

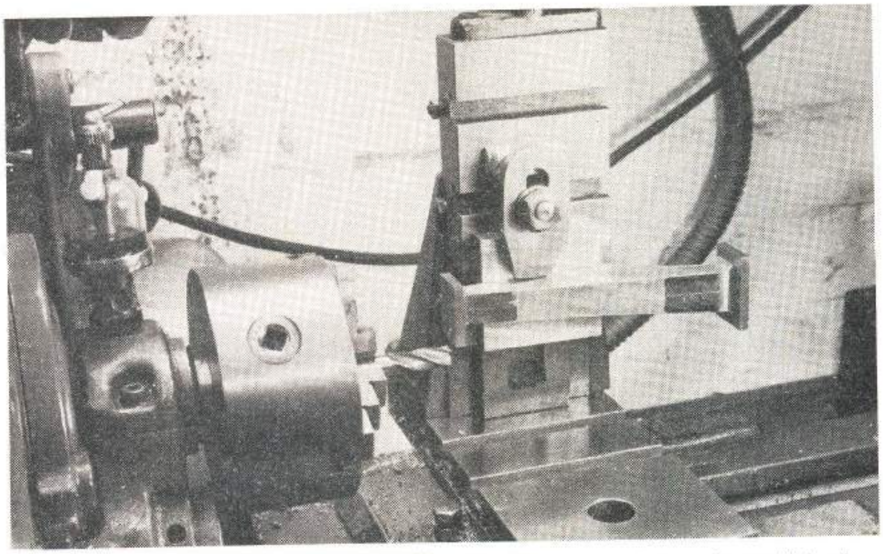

Fig. 23: A suggested set-up for machining the columns in the lathe.

In my case the work was carried out on a milling machine and no problems were encountered. The set up is shown in Fig. 22, the essential preliminary being the setting of the vice jaws parallel to the cross slide of the machine, this being accomplished by the use of a d.t.i. mounted on a magnetic base. A suggested set-up for performing the operation on a Myford lathe is shown in Fig. 23. Readers will note with horror that the work is secured to the vertical slide by one clamp only, and I hasten to add that, had I been using this method, I would have made a bottom fastening by drilling and tapping the table of the vertical slide. It was not possible to place the work higher up on the slide and thus make use of the lower "T" slot for an additional clamp since it would then have been impossible to lower the slide sufficiently to carry out all the necessary machining. This problem of "running out of travel" is, to me, one of the most exasperating limitations of lathe milling.

Note that the base of No. 1 standard forms part of the mounting for the pump unit, and thus the upper part of the outer flange of this base should be milled flat for a distance of $\frac{1}{4}$ in. in from its edge. Referring again to Fig. 22, I simply transferred the cutter from the horizontal spindle to the vertical head of the milling machine and machined the top surface of the foot at the same setting of the work.

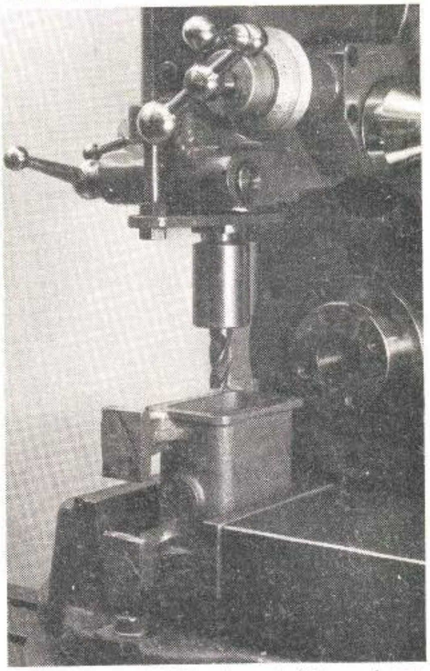

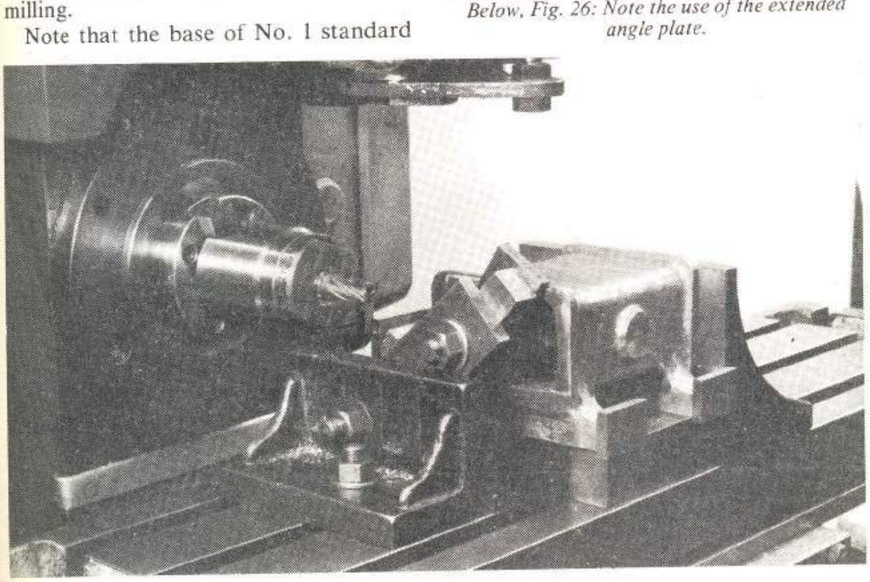

Above, Fig. 24: Milling the end of the condenser. Below, Fig. 26: Note the use of the extended angle plate.

Standards 3 and 5 with Condenser Shell

The two standards which are cast integral with the condenser shell would appear to present a formidable machining problem, but I found the combined casting much easier to hold than the single standards. The first operation is, of course, to clean up with files the many surfaces which are not to be machined, again bearing in mind that the outer side of the standard No. 5 has to take one of the bearings for the reversing gear shaft. On the original design, it was found that the expansion link for the I.P. cylinder would foul the top corner of the condenser shell in certain positions of the valve gear, and it was thus necessary to file a relief space in the condenser shell to prevent this. Later castings incorporate this relief as shown on the drawings.

The guide bar faces and one end of the shell are filed so that the casting will locate on them without rocking. With the casting resting on one end of the shell (shimmed if necessary to bring the guide bar faces into a vertical plane), and using a surface or height gauge, the centre-lines of the standards ($2\frac{9}{16}$ in. apart) are marked all round the casting, making sure that the marked lines are in the centre of the columns.

The condenser ends are first machined to length and truly parallel. If using a vertical miller, the casting may be gripped

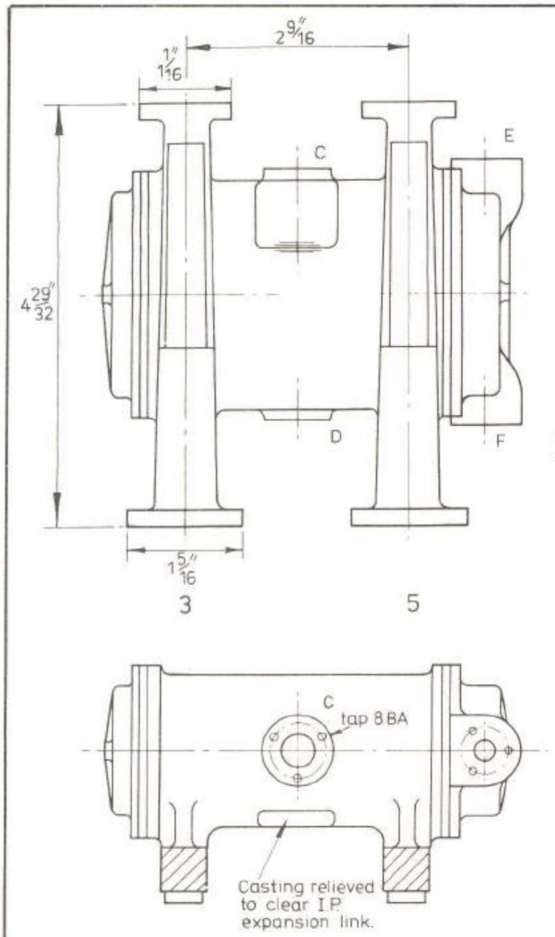

CONDENSER (incorporating Standards 3 & 5)

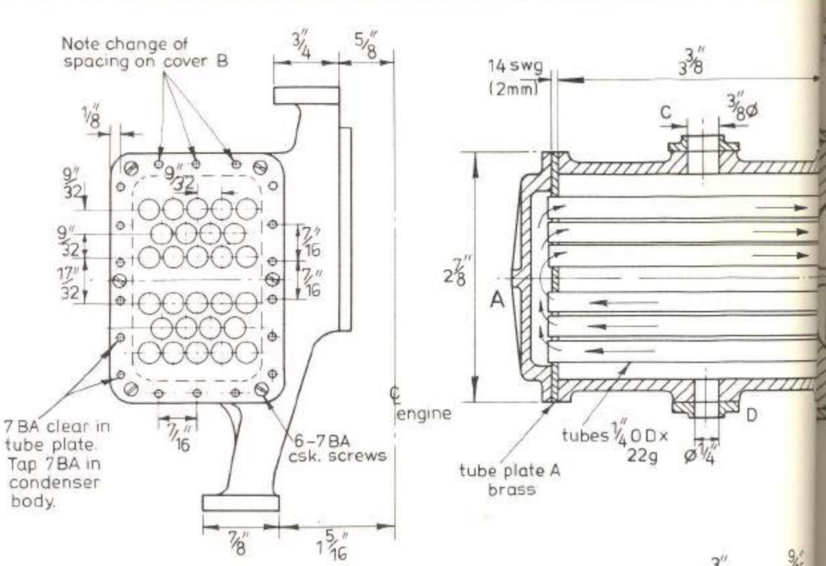

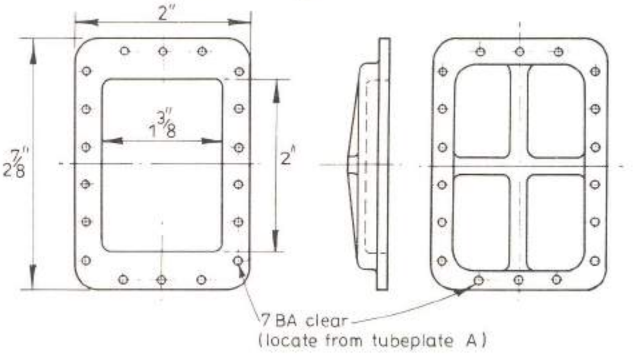

END COVER "A"

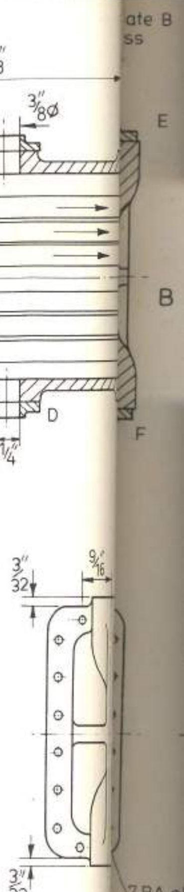

COV

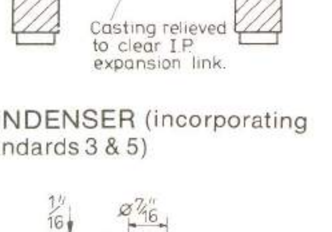

FLANGE AT C

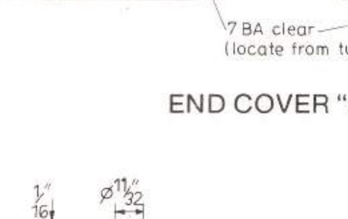

FLANGES AT D, E & F

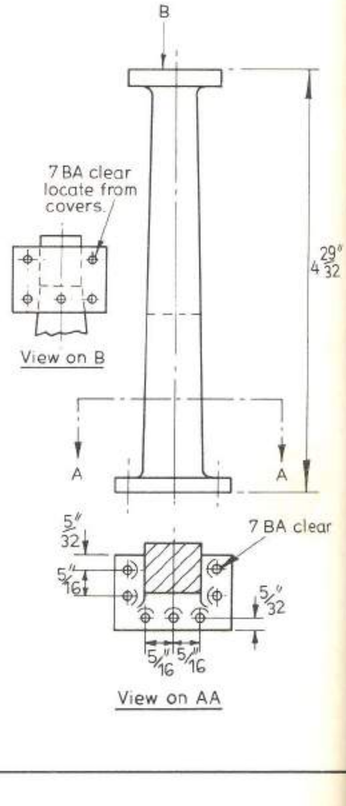

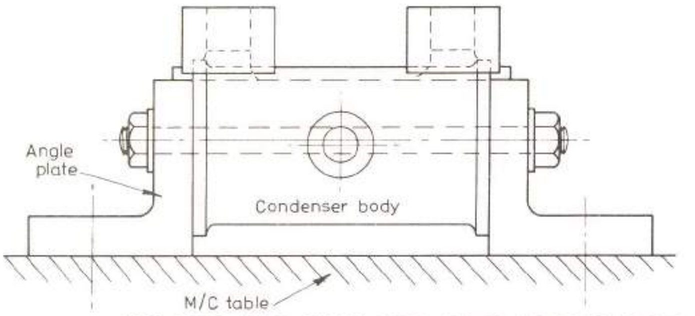

Fig. 25: USE OF TWO ANGLE PLATES AS M/C VICE

AL VI
& 5 hav
rate de

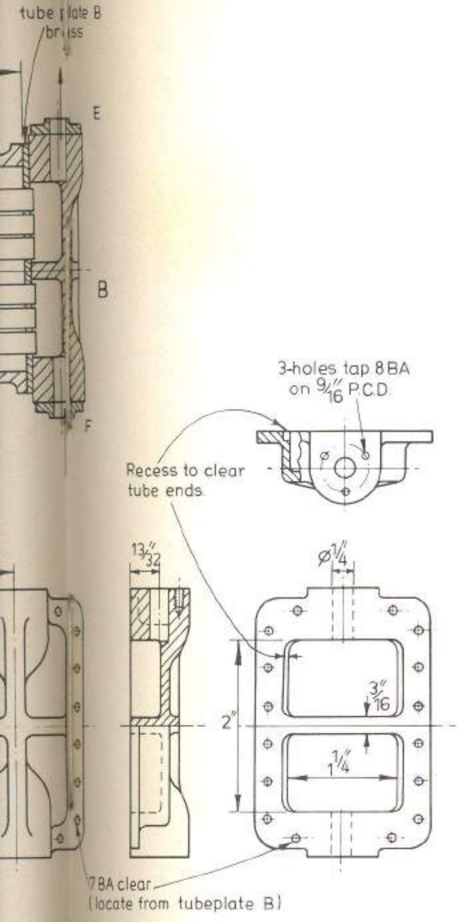

END COVER "B"

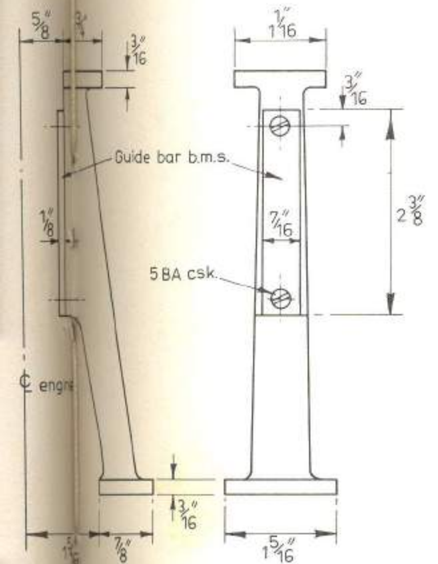

GENERAL VIEW OF STANDARDS
(No's 3 & 5 have condenser attached
See separate details).

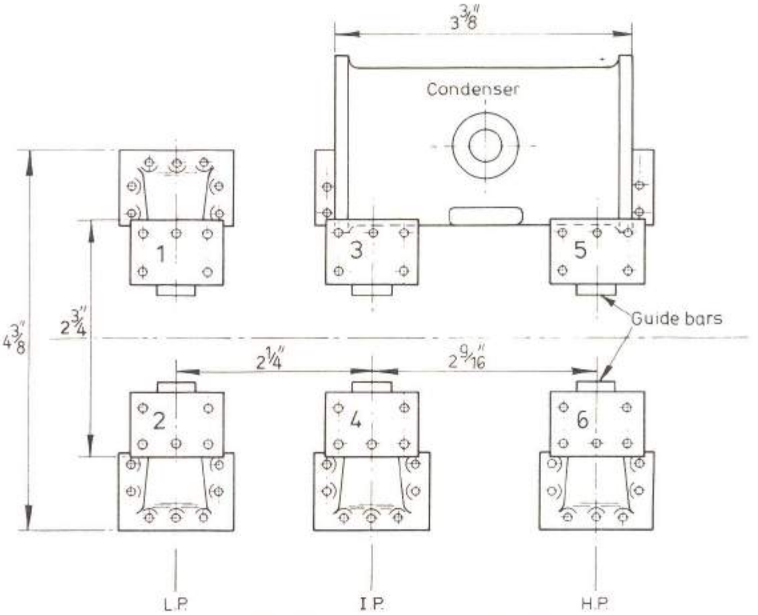

PLAN SHOWING LOCATION OF STANDARDS

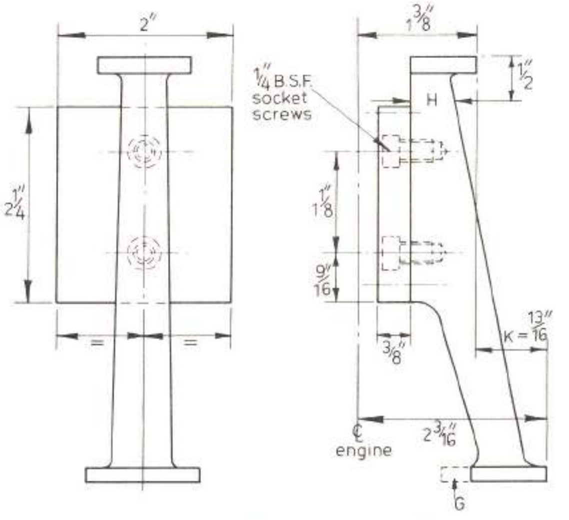

Fig. 20: HOLDING FIXTURE FOR STANDARDS

©

in a machine vice as shown in Fig. 24, checking that the casting is set up squarely and that the previously described centre-lines are parallel to the machine table; a packing strip is used against the condenser shell to clear the flange on the latter. A sharp end mill (or fly-cutter) is then traversed around the surface of the upper flange. The casting is then turned over, bedding the previously machined end on to the face of the machine vice. The overall length of 3⅜ in. between the end flanges should not be exceeded since, otherwise, condenser end plate "A" is liable to foul one of the water pumps.

For machining the guide bar faces, the work was clamped by the machined condenser ends between two angle plates (the work was outside the capacity of my machine vice) as shown in Fig. 25, and the guide faces machined with an end mill or fly-cutter. At the same work setting, a cutter inserted in the horizontal spindle of the miller took care of the machining of the top faces and edges of the standard. For machining the bottom feet, the casting was turned over and rested on parallels locating on the previously machined guide faces as shown in Fig. 26. In this case I had to extend one of the angle plates as shown. *To be continued*

A Marine Triple Expansion Engine

The O. B. Bolton design updated by J. P. Bertinat

Part VII From Page 93

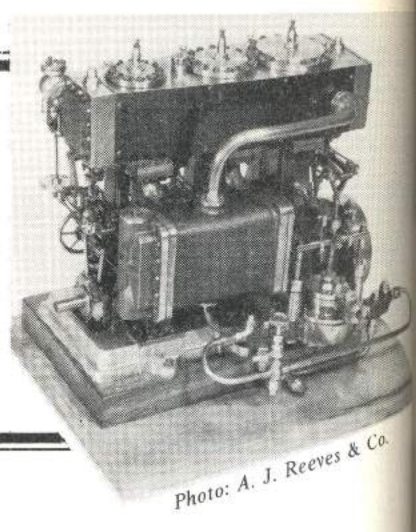
Photo: A. J. Reeves & Co.

Some of the detail drawings for the machining operations described in this section appeared on pp92-93 of the 17 January issue. This time the Author deals with alternative methods of machining some of the components mentioned last time.

Castings etc. for this engine are obtainable from Messrs. A. J. Reeves & Co. Ltd., Holly Lane, Marston Green, Birmingham, B37 7AW.

Machining the Standards on the Lathe

With a little thought and careful setting up, the above work can be carried out with the job bolted to the boring table of the lathe, using a fly-cutter for metal removal. Fig. 27 shows the casting set up on the Myford ML7; there is just sufficient room for the fly-cutter to cover the end face without fouling the ends of the standard. If using this method, the suggested order would be:-

(a) Machine one end face as shown (the outer edges of the foot and cap can also be machined at this setting).

(b) Clamp to boring table with machined end face downwards and fly-cut guide bar faces.

(c) Re-clamp as at (a) and machine other end face.

(d) Re-clamp with ends of standards facing chuck and end-mill or fly-cut to dimensions.

(e) For milling the remaining edges of the feet and caps, I suggest that the casting be mounted as at (d), but packed up to the correct height to bring the edge of the end mill to the finished edge dimension of the work. This will involve several settings with various packing thicknesses, but is preferable to using a vertical slide for such a large overhanging component.

It goes without saying that the need for dimensional accuracy and squareness, mentioned when dealing with the plain standards, exists to an even greater degree with this compound casting.

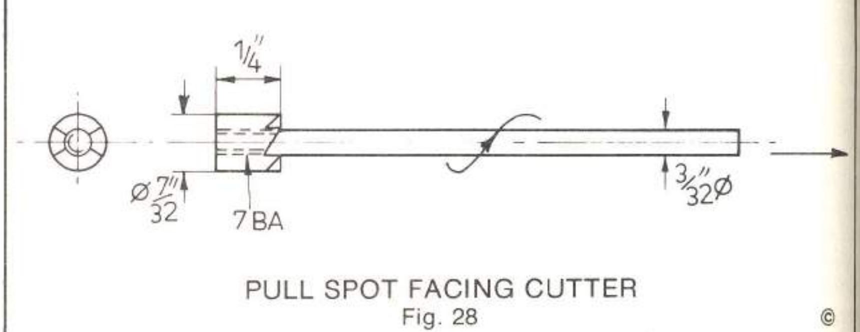

PULL SPOT FACING CUTTER
Fig. 28

The set-up for fly-cutting the condenser casting on the Myford ML7 lathe.

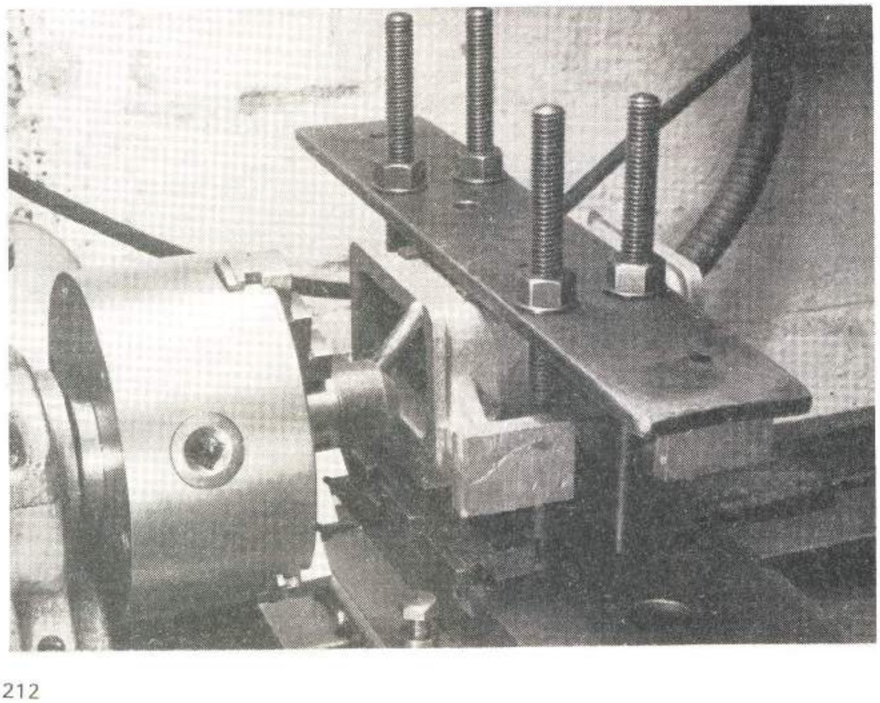

The 7 BA clearance holes in all the bases may now be drilled; since there are six standards to deal with, some builders may think it worthwhile to make up a simple drilling jig for this purpose. For spotfacing the holes, I used a "reverse" spotfacing tool; this is, in my case, a $^7/_{32}$ in. dia. cutter screwed onto a $^3/_{32}$ in. dia. shank and operated by pulling — using an ordinary hand drill — from the reverse or underside of the casting; note that the teeth of the cutter must be made what would be normally be termed "left hand." The tool is illustrated in Fig. 28.

The tops of the standards are drilled from the already completed lower cylinder covers and require careful location. The correct distance apart of each pair of columns is established by using pieces of $^7/_{32}$ in. dia. silver steel between the gland bosses and the guide bar facings as shown in Fig. 29. As a further check, a piece of $1^1/_4$ in. wide b.m.s. should just fit between the guide bar faces. If all machining is to dimensions, the edges of the top faces of the standards should match exactly with those of the covers.

Before spotting any of the holes through to the standards, it is advisable to clamp up all columns to check that their bases are in line, both along and at right angles to the engine centre-line. Standing the assembly on the, as yet, unmachined bedplate will provide a further check, the bases of the standards sitting squarely and symmetrically on their locating pads. When all is correct, as many holes as are accessible in the bottom covers may be spotted through to the standards which are then dismantled for drilling. To counteract the tendency for the standards to tilt during the drilling operation, I bolted them to an angle plate as shown in Fig. 30, making further use of one of the 1/4 in. BSF holes drilled and tapped for the machining fixture. For locating the remaining holes in the tops of the standards, the lower cylinder covers will need to be removed from the cylinders and bolted to the standards by the first holes drilled.

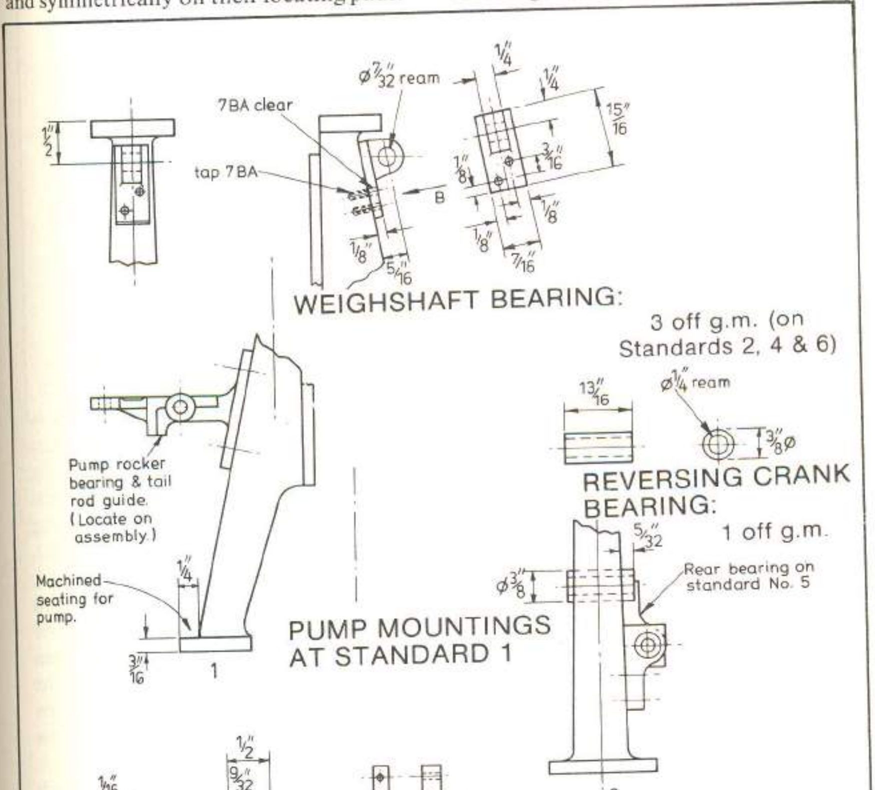

Along with drawings of the standards, I have endeavoured to assemble details of the various bits and pieces that have to be mounted thereon, so that as many as possible of the attachment holes may be drilled and facings lined up before the standards become "permanently" built into the engine. In such a complicated project as this, some partial assembly and subsequent dismantling is inevitable, but I like to reduce this to the minimum.

Guide Bars

These are detailed with the standards and consist of 2 3/8 in. lengths of 1/8 in. × 7/16 in. b.m.s., they are secured to the standards by 5 BA countersunk screws. Although they can be made up at this stage, I suggest that they are not fitted to the standards until after the crossheads have been made and assembled on to the piston rods, in order to get the bars in correct alignment.

Weighshaft Bearings

The three brackets come as a single casting and much of the machining can be carried out before separating them. My order of procedure was:-

(i) Shape (or mill) top and bottom edges of casting to bring these parallel and to an overall length of 15/16 in.

(ii) Shape or mill bolting face.

(iii) Mount casting on angle plate on faceplate and drill and ream 7/32 in. dia. through the three bearings simultaneously.

(iv) Separate the three parts.

(v) Spot face ends of bosses 3/8 in. dia. (strictly speaking, this operation is only necessary on the bearing attached to standard No. 6, since the other two provide no end location).

(vi) Mount on stub mandrel in chuck to face sides of base to width of 7/16 in.

(vii) Drill and spot face attachment holes.

The weightshaft is located 1/2 in. below the upper face of the standards and with the latter securely located on the cylinder assembly, a straight edge can be placed along the appropriate faces of the standards. With luck, the faces should be in line, but any slight correction can easily be made by filing, subsequently blending the remainder of the casting to suit. The bearings are now threaded on a length of 7/32 in. dia. silver steel and offered up to the standards, clamped in position and the holes spotted through, ready for drilling and tapping when next the standards are dismantled. Before putting the bearings aside, they should be numbered or otherwise identified.

Reversing Wheel Bearings & Reversing Crank Bearing

The worm drive by which the motion of the reversing wheel is transmitted to the weighshaft needs to operate without backlash otherwise the valve gear will rock slightly and will be noisy in operation. With this in mind, it is imperative that the gears to be used are available at this stage so that the correct meshing distance (nominally 3/4 in.) can be obtained. I cut my own gears, but Reeves now supply a suitable 40:1 ratio drive in which the bore of the bronze worm wheel is 1/4 in., while that of the steel worm is 1/8 in. I have adjusted the diameter of the wheel shaft accordingly, but have left the worm shaft at 5/32 in. dia. since it is a simple matter to open out the bore of the worm.

The reversing crank/worm wheel bearing is simply a gunmetal bush 13/16 in. long, 3/8 in. outside diameter and 1/4 in. bore, mounted in a hole drilled and reamed in standard No. 6. To ensure that this hole is truly axial, the standard may be clamped, guide bar face down, to an angle plate (using the 1/4 in. BSF holes drilled earlier), which is in turn mounted on a vertical slide. The casting is lined up by running an indicator across the machined foot, and the slides are adjusted so that the marked centre of the hole coincides with a truly pointed length of 1/4 in. dia. silver steel held in the lathe chuck. The hole can now be drilled and reamed from the lathe chuck. The bearing bush may be either a press fit or Loctited or sweated into the standard — I chose the latter.

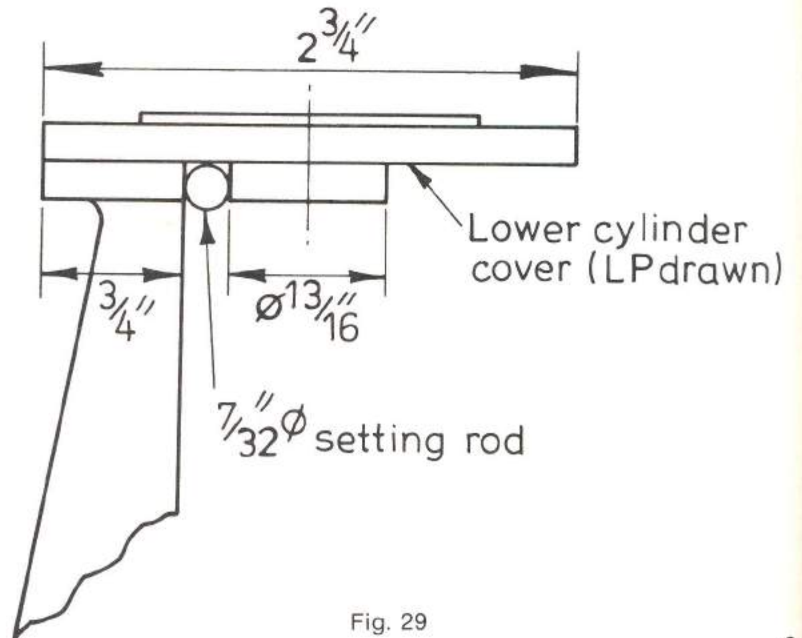

Fig. 29

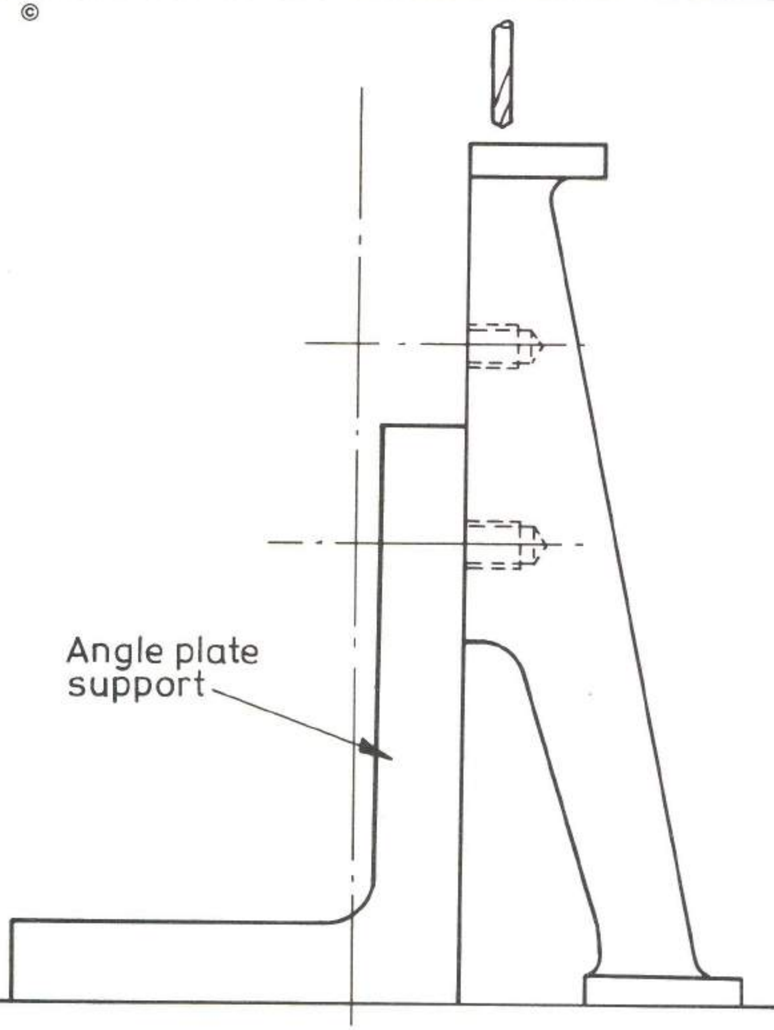

DRILLING STANDARD CAP
Fig. 30

The reversing wheel bearings, which are mounted on standards Nos. 5 & 6, are made from 3/16 in. × 1/4 in. b.m.s. and are fitted with flanged gunmetal bushes for a 5/32 in. dia. shaft. The bearings are generally similar in shape, but in order to clear the condenser on No. 5 standard, the rear bearing is inverted and hence its oil hole is in a different place. The remarks concerning the fitting to the standards are as for the weightshaft bearings above. The final position of the bearings on the standards should be obtained with the gears in position i.e. with the worm wheel mounted in a stub of 1/4 in. dia. silver steel and the worm on a 5/32 in. shaft. Again the fixing holes may just be spotted through until next dismantling.

The only other mounting on the standards is the bracket for the pump rocker and pump tail rod guide. Its form and general position on standard No. 1 is indicated on the drawing of the standards, but it is impossible to locate it with precision until the pump unit is made and fitted, and accordingly its mounting holes will need to be left for the time being.

To be continued

A Marine Triple Expansion Engine

The O. B. Bolton design updated by J. P. Bertinat

Part VIII From Page 214

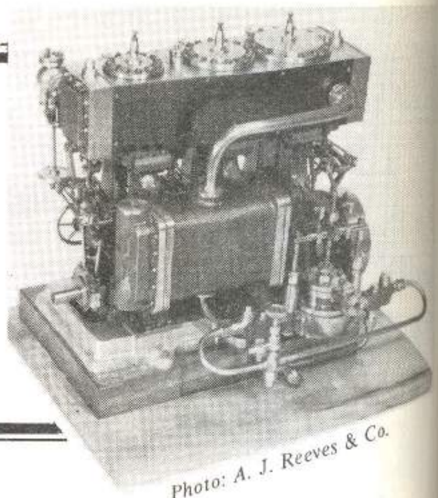
Photo: A. J. Reeves & Co.

This time we arrive at the details of the manufacture of the condenser. The drawings for this component have already been published on Page 92/3 of 17 January issue, integral with the standards.

Condenser

Although logically the last part of the engine to be completed since it comes at the end of the steam cycle, its incorporation with two of the main supporting standards suggests that it might with advantage be dealt with at an earlier stage and this I propose to do.

The condenser used in our engine is referred to as a *surface* condenser since the steam to be condensed comes only into contact with the cool *surfaces* of tubes through which an entirely separate supply of cooling water is pumped. The condensate discharged from the condenser is thus derived entirely from the steam and, when lubricating oil has been separated off, the condensate may be re-used as boiler feed. In the earlier type of *jet* condenser, a spray of cold water is injected directly into the steam to be condensed, and hence the discharge from the condenser is a mixture of condensate and cooling water, not normally suitable for re-use as boiler feed.

Referring to the drawing, exhaust steam from the low pressure cylinder enters the condenser via a 3/8 in. outside diameter pipe at upper point "C" and the condensate is withdrawn from the base of the shell (point "D" on the drawing) via a 1/4 in. outside diameter pipe leading to the air or extraction pump. The discharge from the air pump is fed into a tank called a 'hot well' from which the boiler feed pump would normally draw its supply.

In a model of the present size, it is hardly worth the bother of trying to extract the oil from the condensate to enable it to be re-used. The cooling water, which in a marine installation is sea water, enters the end cover "B" at point "F", passes along the lower bank of tubes, is reversed at cover "A" to pass along the upper bank of tubes to discharge at "E". This contra-flow arrangement in which steam and cooling water flow in opposite directions, is employed to produce a more nearly constant temperature difference between condensate and cooling medium, i.e. cold water with condensate at base and warmer water with steam from engine. With this system, a more effective heat transfer from steam to cooling water is possible. Now to construction details.

Condenser Tube Plates

The tube plates are cut from 14 s.w.g. brass, or nearest available thickness, their outer profile being most easily obtained by scribing round the condenser shell. They should be left slightly oversize at this stage so that the complete flanges, including the covers, may be trimmed flush at a later stage. It will be noticed that in addition to the studs which secure the condenser ends to the shell, thereby sandwiching the tube plates between them, there are six additional countersunk screws (brass) at each end whose purpose is to locate the tube plates only.

The usual procedure adopted for locomotive frames may be applied to the tube plates viz: mark out on one plate, clamp plates together, drill say three of the 7 BA clearing holes in both plates and lightly rivet the two plates together. Most of the drilling and the reaming of the tube holes can be carried out with the two plates thus joined, but do note that the plates are 'handed' by the fixing holes at top and bottom. These are positioned at end "B" to clear the pipe entries in this cover, and details are given on the drawing of cover "B".

Before assembling the tube plates, they have to serve as drilling jigs for the end covers. Cover "A" needs little machining other than the bolting face which is faced with the work held in a 4-jaw chuck. The fixing holes are spotted through from the appropriate tube plate (taking care that the plate is offered up the correct way round), drilled 7 BA clear and then spotfaced on the outside.

With the tubes projecting slightly from

Fig. 31: The condenser cover being machined on the Author's Drummond lathe. Note the multiplicity of slots in both the faceplate and the angle plate used to secure the cover for this operation, and the use of a counterweight to balance effects of the angle plate.

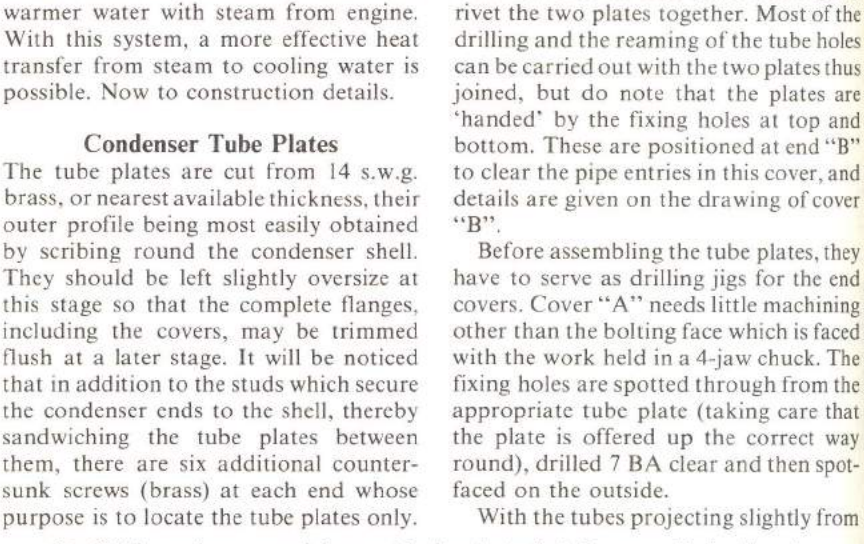

the tube plate as shown in the drawing, it might be found that the ends of some tubes foul the edges of the case recess in the cover. This problem is overcome by milling a shallow rebate, thus locally enlarging the recess; this is shown on the drawing for cover "B" where such treatment is definitely required. In addition to the above sequence, cover "B" needs setting up for boring the circulating water connections; Fig. 31 shows this in progress. Incidentally, observe the lovely large gap on the aged Drummond 3½ in. lathe — there is no problem with swinging a large angle plate; note also the profusion of slots in the faceplate, a feature which makes (or made, since I no longer have the lathe) clamping a lot easier — sorry about the splashes on the wall — I get my share too!

In cover "B", the cast recess has, for some reason, been made smaller than for cover "A", so that the rebate shown in the drawing is certainly necessary in this case; care should be taken not to cut the additional recess too deeply since the side wall of the casting is not over thick.

Condenser Tubes

The condenser tubes are ¼ in. outside diameter x 22 s.w.g. copper, 3⅝ in. long, and I parted mine off in the lathe using the tailstock chuck as a dead stop. The length quoted allows for a slight projection of the tube at each end of the tube plate, and this will permit a visible fillet of solder to be formed and will help to ensure a sound strong joint. Before assembly, the ends of the condenser shell, both sides of the tube plates and the tube ends should be tinned, taking care not to leave any blobs of solder in positions which would prevent the plates from bedding down on assembly. The tube plates and tubes are then assembled with the shell, the plates being secured by the 6 BA brass countersunk screws, and the whole assembly sweated up.

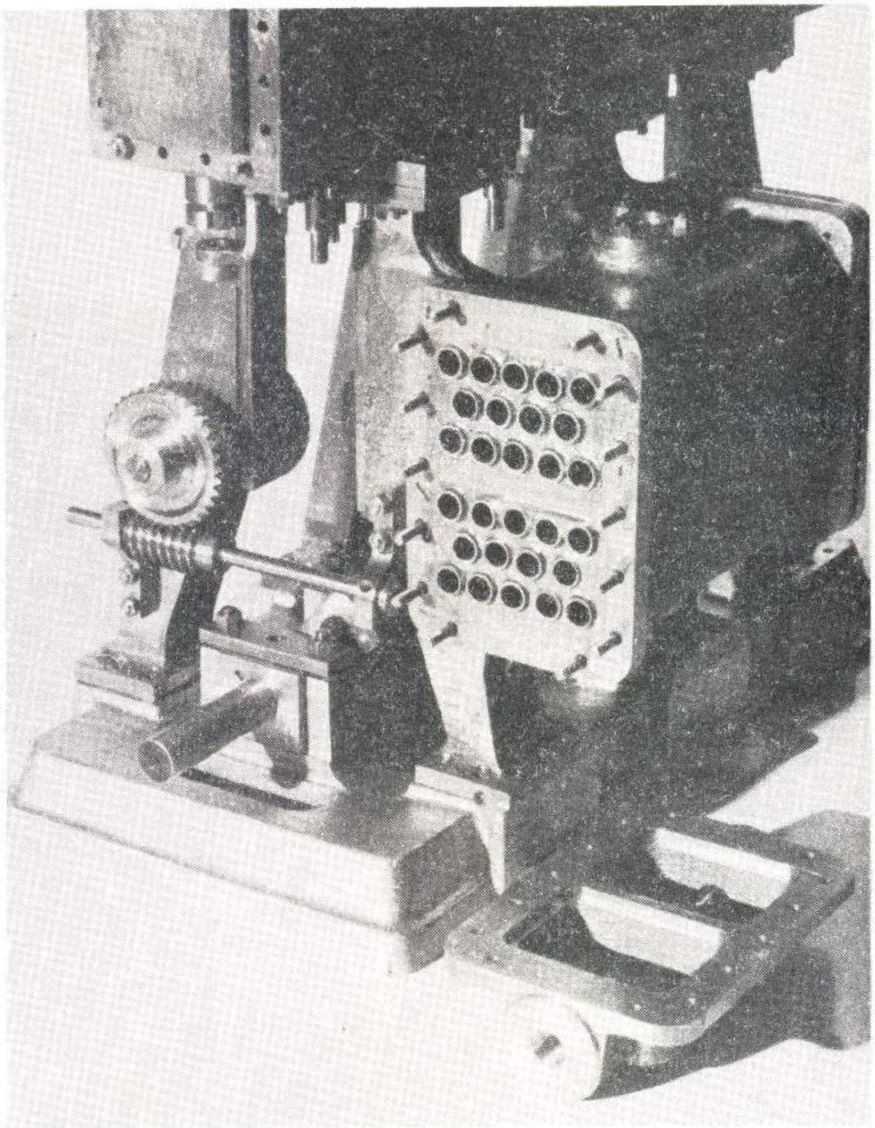

Fig. 32: The engine is shown here part-assembled, the integral condenser can be seen, the cover has not yet been fitted and is by the bedplate of the engine. Note also the embryonic reversing gear.

Fig. 32 shows the partly completed engine with the condenser tube plates assembled, together with end cover "B" showing the local enlargement of the cast recesses referred to above. Note also the assembled reversing gear shafts with their worm and worm wheel.

The final items on the condenser are the four brass or gunmetal pipe flanges. The exhaust pipe flange at "C" is for ⅜ in. pipe while those for the condensate discharge and circulating water are for ¼ in. outside diameter pipe. I have shown clear bores for these flanges, intending them to be silver soldered to their respective pipes, but they may be threaded 40 t.p.i. if desired.

The next items to be dealt with are the bedplate, bearings and crankshaft.

To be continued

MEAN MACHINES

IN 1874 THE **GATLING GUN** COMPANY MANUFACTURED A **CAMEL GUN**. ALTHOUGH SPECIAL CAMEL MOUNTS WERE MADE, NO EVIDENCE EXISTS OF GATLING EQUIPPED CAMEL CORPS.

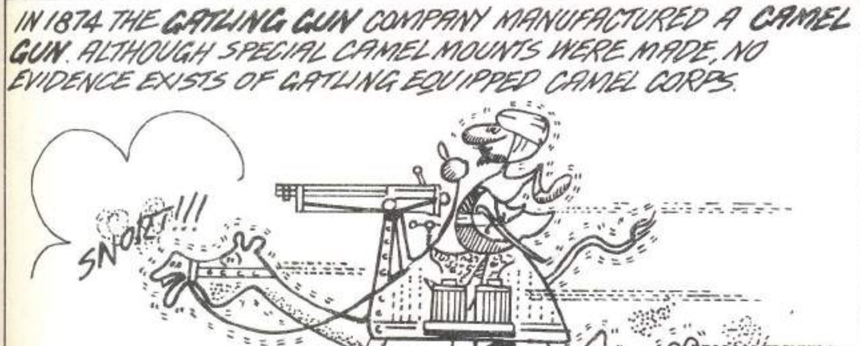

A Marine Triple Expansion Engine

The O. B. Bolton design updated by J. P. Bertinat

Part IX From Page 309

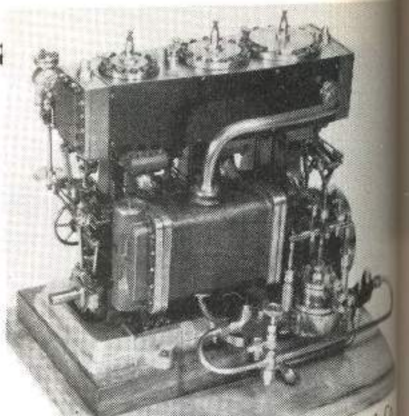

Photo: A. J. Reeves &

In the last few instalments we have been dealing with the making of the engine columns and the details of the condenser for the engine. This time we move on to deal with the bedplate and main bearings.

Bedplate

This comes as a substantial aluminium alloy casting incorporating the main bearing housings and the location pads for the six standards. The design of the engine incorporates six crankshaft bearings which must be in accurate alignment and it is hence necessary to ensure that, in any machining operations, the bedplate is not distorted by clamping or other forces. My first operation on the casting was to file the underside so that it would sit without rocking on a surface plate, a reasonable area of contact being assured by the use of marking blue. While in a filing mood, it is advisable to clean up any non-machined areas which may need attention (my casting required very little such treatment) and to check the widths of the openings for the cranks and eccentrics, correcting if necessary. I have increased the width of the eccentric openings from $\frac{1}{2}$ in. to $\frac{9}{16}$ in., so that some filing will be required here as the castings are made to the original drawings.

The casting was then clamped lightly to the lathe faceplate, arranging the clamps to coincide as far as possible with the areas which have directly contacted the surface plate, and a light cut taken over the tops of the bearing housings. This operation provided a truly machined location for a subsequent operation, and the set-up is shown in Fig. 33. The casting was then reversed on the faceplate and the underside machined flat. In the interests of stiffness, I recommend that the minimum amount of material be removed from this lower face since the nominal height of $1\frac{1}{4}$ in. from the underside to the crankshaft centre-line is not critical; it is the dimensions from the tops of the bearing housings which matter. The relevant set-up is shown in Fig. 34, the clamping plates being conveniently placed across the crank openings.

The remainder of the machining of the base is most conveniently carried out with the work bolted to the table of a vertical milling machine, as shown in Fig. 35, a single setting of the work and one sharp end mill sufficing for all necessary operations. Setting up and marking out is a most important pre-requisite to accurate machining. Firstly it should be checked that the axis of the casting, as defined by the edges of the bearing supports, is truly parallel to the direction of the machine table travel. The seatings for the standards, which should finish $\frac{1}{16}$ in. above the general level of the casting are first machined, following with the tops of the bearing housings which finish $\frac{3}{4}$ in. above the standard seatings.

The slots for the bearing brasses may now be cut, proceeding by easy stages of depth and width. A final light cut at full depth of $\frac{5}{8}$ in. is taken along each side of all bearing housings so that we end up with the slots centrally disposed with respect to the edges of the housings. The slots should preferably be to micrometer accuracy, using a depth micrometer and telescopic gauge for the depth and width respectively; alternatively, or as a check, a true piece of $\frac{5}{8}$ in. square b.m.s. should fit nicely into the slots. Needless to say, for these final cuts, all slides other than the longitudinal table feed should be locked and the result should be six identical slots in perfect alignment.

Note that a cutter smaller in diameter than the width of the slot is used so that the two sides are finished separately. Fig. 35 indicates that I used a $\frac{3}{8}$ in. dia. cutter throughout; note also the direct holder for the cutter. This holder is merely a No. 2 Morse taper shank, drilled and tapped for a draw bolt and carefully bored $\frac{3}{8}$ in. dia. for the cutter which is secured by one or two socket grub screws. I find this type of holder more convenient for many applications than the conventional Clarkson chuck since the holder produces less overhang and much greater work visibility. When I first acquired my miller, I made up a set of four of these holders to cover the standard end mill shanks;

Fig. 33: Precarious but effective. Facing the top of the bedplate on the lathe.

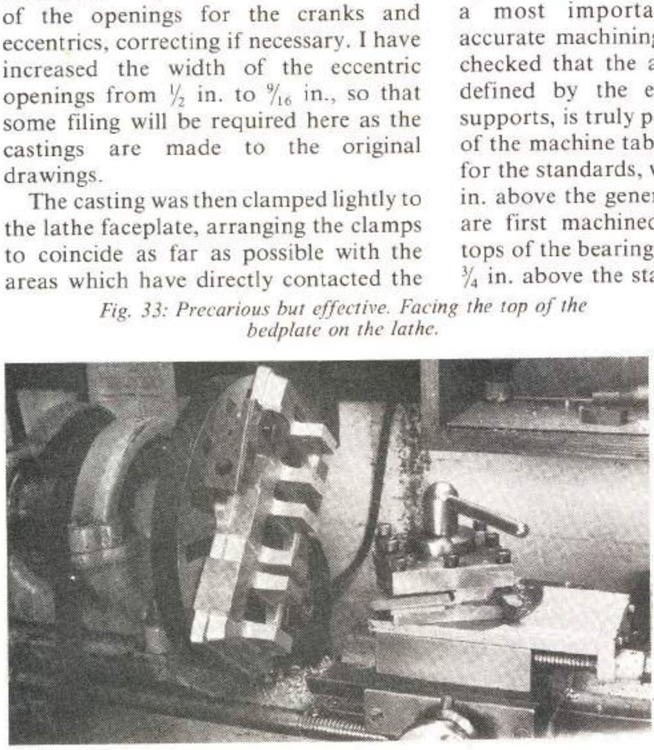

Fig. 34: The bedplate is shown here reversed and on a different lathe, this time the underside is receiving attention.

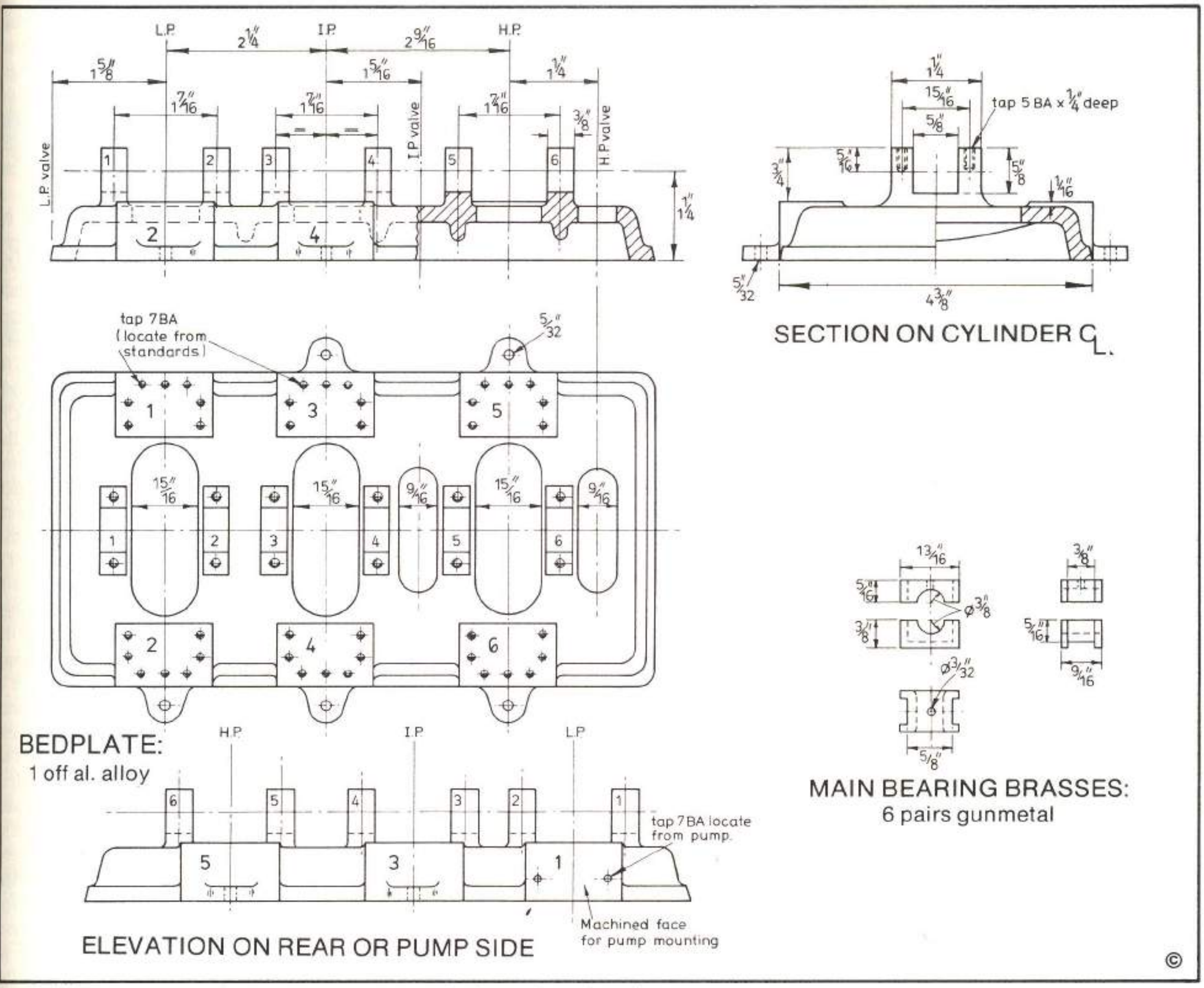

SECTION ON CYLINDER ℄.

BEDPLATE:
1 off al. alloy

MAIN BEARING BRASSES:
6 pairs gunmetal

ELEVATION ON REAR OR PUMP SIDE

I note that they are now obtainable commercially.

It now remains to reduce the widths of the bearing housings to $\frac{3}{8}$ in., at the correct centre distances. Readers who may have the original drawings would have noticed (in good time I hope!) an error in the spacing of the bearings between the L.P. and I.P. cylinders (bearings 2 and 3 on present drawings); this distance is given as $\frac{3}{4}$ in. whereas it should be $\frac{13}{16}$ in. The casting is made to the earlier dimension, but there is enough material on the sides of the bearing housings to enable them to clean up to the correct dimension — it just means that more material is removed from one side than the other! The first stage suggested is, with a scriber point held in a drill chuck in the miller spindle, to locate and mark the transverse centre-lines of the cylinders; these may be positioned with accuracy by using the machine feed screw readings, checking the movements with a rule to ensure that the number of turns of the leadscrew has been counted correctly. These centre-lines should fall on the centres of the locating pads for the standards and, what is even more important, be symmetrically spaced with respect to the adjacent bearing housings, so that a distance of $1\frac{7}{32}$ in. on either side of the cylinder centre-lines, there is sufficient material to clean up the housings to their $\frac{3}{8}$ in. width.

Having established and checked that all is correct, machining may proceed, working from feed screw readings. These facing cuts should be taken to a depth of $\frac{3}{4}$ in. to make sure of clearing the bottom flanges of the lower bearing brasses. The vertical edge of the seating for column (1) needs to be machined to accept the pump unit. Had the work been initially mounted on parallel strips, and had a long series end mill been available, this operation could have been carried out at the same setting as for previous work. Failing this, the bedplate may be mounted on a large angle plate, setting the casting truly horizontal by the use of an indicator on the machined sides of the bearing housings, and end-milling the face to $2\frac{3}{16}$ in. from the engine centre-line (or $1\frac{7}{8}$ in. from the nearest side of the bearing housing). The only other work which can be carried out on the bedplate at this stage is the drilling of the five $\frac{5}{32}$ in. dia. holes in the holding down lugs, after which the casting may be set aside to await the fitting of the main bearings.

Although the small milling machine is now tending to become part of the serious model engineer's equipment, there must still be many for whom the vertical slide on the lathe represents the only milling facility, and for the large baseplate casting, the use of the latter equipment present many complications. For a start, the table of a vertical slide is normally too small to permit the clamping of a large casting, and the work will need to be mounted on a steel plate sub-base which can in turn be attached to the vertical slide. A second and more awkward problem is the restricted cross slide travel which seems to be between 6 and $6\frac{1}{2}$ in. on lathes normally available to model engineers. To cover the complete machining of the bedplate casting, a travel of at least $7\frac{1}{2}$ in. is required, so that the work will need to be re-set at some stage. This re-setting needs to be carried out without loss of bearing alignment and is most easily accomplished by moving the sub-base on the vertical slide table. The edge of the sub-base should have been previously prepared and set to serve as a datum with which to check with a D.T.I. for alignment. Rather than trying to complete this bedplate without a miller, I would prefer, if possible, to use the services provided by many accommodating Technical Colleges. The milling operation could easily be completed in a single college period so that the problem of having to leave a job set up in a machine should not arise.

Main Bearing Brasses

These come as two castings, each sufficient for three bearings. The first operation is to square up the outsides of the castings so that they are flat and parallel, leaving them oversize in thickness i.e. $\frac{5}{8}$ in. thick, but reducing them to their final width of $\frac{13}{16}$ in. This operation can be carried out by facing in the lathe, the work being held in a 4-jaw chuck, or by milling or shaping — I used the latter. The subsequent order of procedure will depend on the milling facilities available. If all the work has to be carried out on a single machine tool, the sequence will need to be planned so that all the milling of the $\frac{3}{8}$ in. grooves can be carried out without disturbing the vertical slide set up. In this case, the six bearings are separated (but not yet split) and their ends squared by facing in the 4-jaw chuck. The vertical slide with its machine vice is then set up on the lathe, checking carefully that the vice jaws are truly parallel to the cross slide feed. Using a $\frac{3}{8}$ in. dia. end mill, the side and bottom grooves are cut in each bearing, taking care to ensure that the $\frac{5}{8}$ in. width across the bases of the side grooves is maintained accurately. The bearings are then fitted to the housings in the bedplate, any necessary slight adjustment being made with a smooth file. At this stage the brasses should be numbered or marked (twice on each bearing so that they can be identified after splitting) in order that they are always assembled in the same place and the same way round. The bearings may now be split and faced to the correct length, the upper sections being left slightly oversize so that when assembled in their housings, the bearings should project 0.005-0.01 in. above the top of the housing so that they are clamped firmly by the keep plates.

The next operation is the boring of the bearings, and for this purpose a fixture is made up to the drawing of Fig. 36. The $\frac{5}{8}$ in. square aperture in this fixture is a true replica of those in the bearing housings, and the already machined brasses should be a snug fit into it; one edge of the fixture should be clearly marked so that all bearings will be set in the fixture the same way round. After clamping, say, No. 1 bearing in the fixture, the centre of its bore is carefully marked out and deeply centre-popped, and the fixture is mounted squarely on an angle plate which is then mounted on the lathe faceplate. The set up is shown in Fig. 37 which also shows the improvised "wobbler" (a steel knitting needle held in the tailstock chuck) by means of which the work is centralised on the faceplate. Once the fixture has been thus set, subsequent bearings may be inserted for boring without any preliminary marking out, etc. The bearing is then drilled, bored and ideally reamed to finished size; if all previous machining has been carried out with the necessary accuracy, the bearings should line up, but I elected to bore 0.015 in. undersize for subsequent line boring and reaming (partly because I have a special reamer for the job). Note that even when intending to finish by reaming, the use of a small boring tool subsequent to drilling is essential in case the drill wanders slightly from the straight and narrow; this is particularly important when dealing with split bearings where the discontinuity, however firmly the parts are clamped or even soldered together, tends to set the drill off course. The bearing has now to be faced to length, leaving its flanges $\frac{3}{32}$ in. thick, the back flange being faced by reversing the bearing in the fixture. I suggest that the crankshaft be arranged to locate endwise on the middle or I.P. crank, i.e. the flanges of the bearings adjacent to the centre crank webs be left to their nominal size, but that those of the remaining bearings be relieved to allow about 0.01 in. end clearance. Should the engine be intended for marine use, a separate thrust bearing will be needed to deal with propeller thrust and I hope to deal with this later.

To be continued

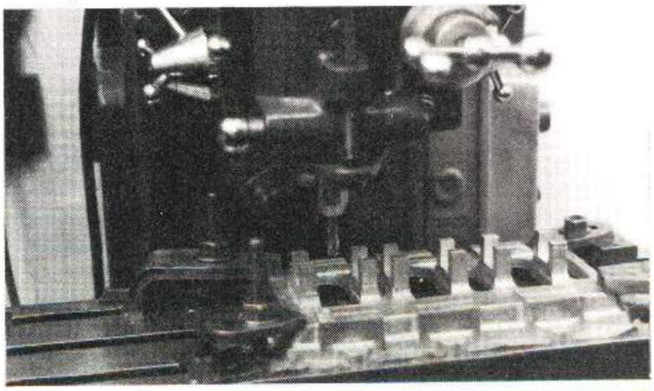

Fig. 35: Having established datum faces, the vertical mill is used to complete the machining of the bedplate.

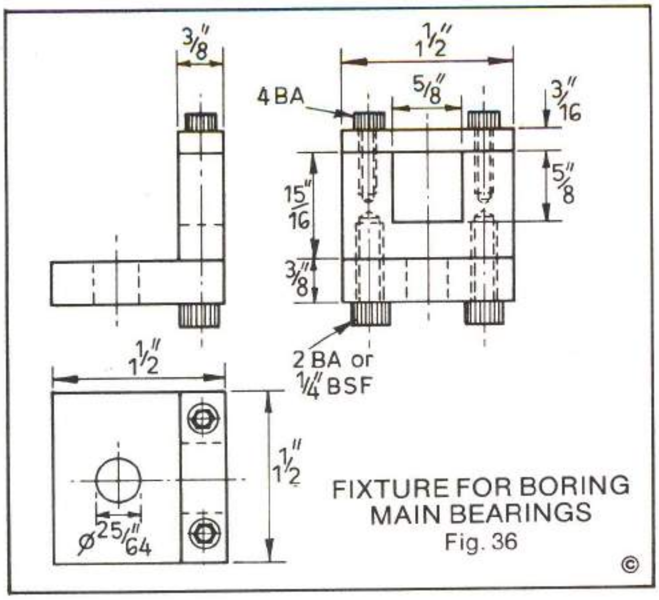

FIXTURE FOR BORING MAIN BEARINGS
Fig. 36

Fig. 37: The set-up for machining the main bearings. Note the use of the improvised "wobbler", and the special fixture.

A Marine Triple Expansion Engine

The O. B. Bolton design updated by J. P. Bertinat

Part X From Page 450

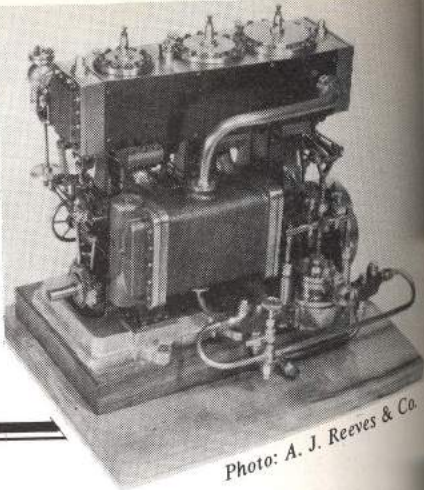

Photo: A. J. Reeves & Co.

In Part IX of the series we discussed the machining of the bedplate for the engine and made a start on the main bearings. This time we finish the main bearings and their caps and deal with the crankshaft.

Bearing Caps

These are simply made from $\frac{3}{8} \times \frac{1}{8}$ in. b.m.s. drilled No. 30 for the 5 BA securing studs and drilled and tapped centrally for the fitting of oil cups. They are individually clamped to the bedplate for spotting the holes in the bearing housings. I find a Record or similar deep throated woodworking clamp handy for this purpose, placing a steel bridge across the base of the casting to accept the lower jaw of the clamp. In my case, this bridging piece was in turn held in a woodworking vice which is fitted to my bench; I find it most useful to be able to hold work at "deck level".

Line Boring of Bearings

If this procedure is to be adopted, now is the time. The bedplate, with all bearings firmly assembled, is mounted between centres on the lathe, and suitable packing fitted between the underside of the casting and the boring table so that the work may be clamped to the latter without movement (or distortion); the cross slide of the lathe should at this stage be locked. I made up a boring bar from $\frac{5}{16}$ in. dia. b.m.s. of such a length that three bearings could be machined at a single setting; the actual cutter was made from $\frac{3}{32}$ in. dia. silver steel. Needless to say, with such a slender bar, only small cuts can be attempted, but remember we left only a total of 0.015 in. on the diameter to be removed. Since my 3-jaw chuck was in good condition, I was able to hold the left hand end of the boring bar in the chuck rather than support it by its centre, and

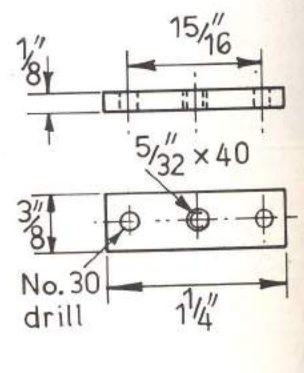

MAIN BEARING CAPS
6 off b.m.s.

©

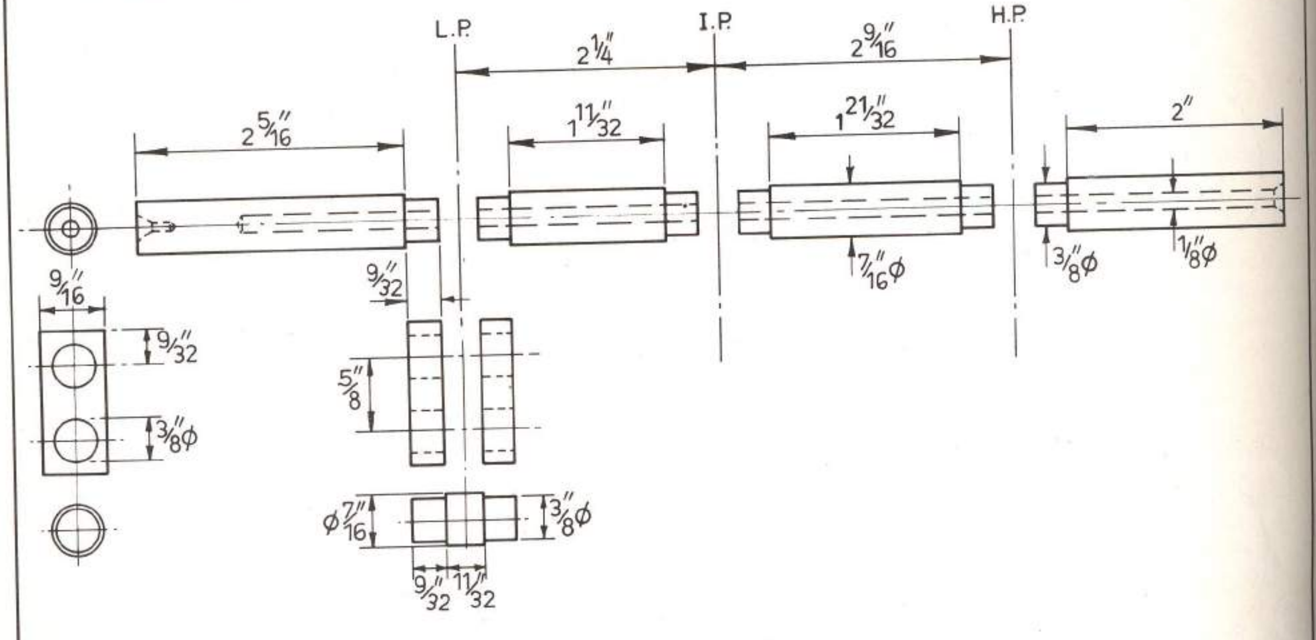

COMPONENTS OF BUILT-UP CRANKSHAFT
Fig. 38

©

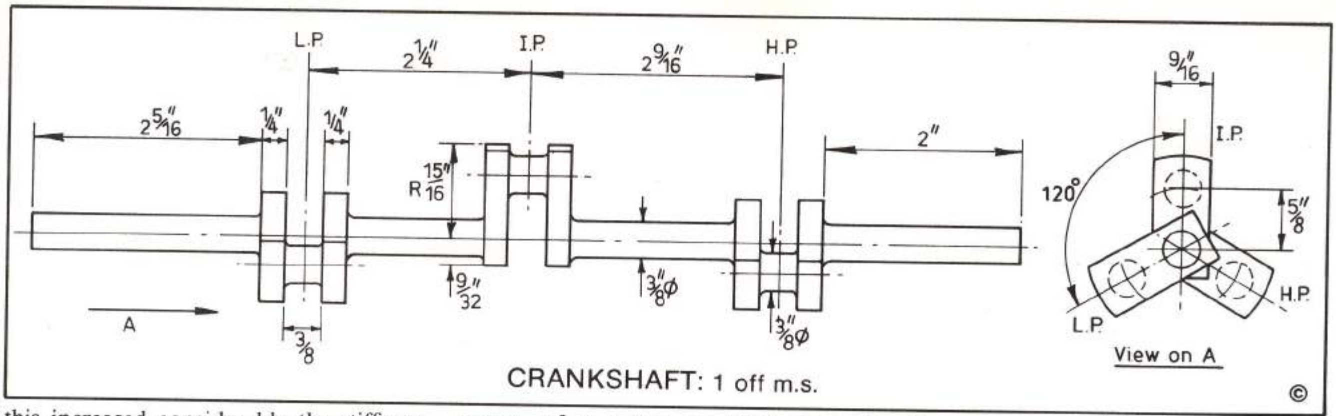

CRANKSHAFT: 1 off m.s.

this increased considerably the stiffness of the set-up. The cutter was set to leave the bearings a few thou undersize to allow for subsequent reaming. After dealing with the three bearings nearest to the lathe headstock, the boring bar was turned end for end and, in order to avoid re-setting the cutter, the lathe was run in reverse for boring the three bearings at the tailstock end. For finishing the bearings, I was able to bring into action one of my "ex-surplus" treasures, namely a $\frac{3}{8}$ in. dia. reamer having 6 in. long blades and having a pilot $1\frac{1}{2}$ in. long. Without this aid, I would have finished the bearings to size in the fixture of Fig. 36, thus avoiding the necessity for the line boring.

Crankshaft

In the absence of a forging, there are several ways of constructing this crankshaft, e.g. machine from solid, build up using Loctite and cross pins, or what some may consider the old fashioned way of brazing or silver-soldering. With a shaft having six bearings, accuracy of alignment is of paramount importance and I consider that any form of built-up shaft would require subsequent machining to ensure the required accuracy. I elected to use the well tried silver-soldering method and preferred to make the shaft in stepped sections rather than in a single length in order to ensure that axial dimensions were maintained. Alignment of the parts during the silver-soldering operation was maintained by a length of $\frac{1}{8}$ in. dia. bms threaded through holes in each shaft section. The dimensions of the parts of the shaft before machining are shown in Fig. 38.

The webs are conveniently prepared from two $4\frac{1}{2}$ in. lengths of bms, reduced to the correct section by milling or shaping; before machining, it will be advisable to normalise the steel (i.e. heat to medium red and allow to cool in air) to relieve the material of any internal stresses produced by the bright drawing process, thus reducing the possibility of subsequent distortion. The two bars can be temporarily fastened together by means of a screw or rivet at each extremity and, after marking out, be mounted on a faceplate for drilling and reaming the crankpin and shaft holes; before separating, the parts should be suitably marked so that they may be assembled in pairs as they were drilled.

Assuming a reasonable 3-jaw chuck, the shaft sections may be produced from $\frac{7}{16}$ in. dia. bms, reduced to $\frac{3}{8}$ in. dia. to fit the holes in the webs; the fit of these holes should be such as to provide good location, but not so close that the silver solder cannot penetrate the full length of the joint. The turning centres on the end sections should be drilled so that they just need cleaning out after silver-soldering, and the $\frac{1}{8}$ in. dia. axial holes drilled as necessary.

Before assembly, all joints should be cleaned and fluxed and, during assembly, the crank throws are set at their correct angular sequence; extreme accuracy in this latter operation is not vital since the valve gear eccentrics will be set to their respective cranks. After silver-soldering, the alignment rod is withdrawn, or cut out in sections if it proves obstinate, and the work spun between centres to ensure that any run-out of the shaft is well within the limits of the material to be removed. Any necessary straightening of the shaft can safely be undertaken at this stage since all parts will be in a normalised or soft condition.

The successful machining of such a long slender shaft calls for great care and judicious use of a fixed steady. The work is mounted between centres and Fig. 39 shows the set up on my ancient Drummond lathe. Note that the headstock centre consists of a short length of $\frac{1}{4}$ in. dia. silver steel held in a 3-jaw chuck and machined in situ. I originally adopted this method of between centres turning when I first acquired the Drummond lathe since I found it impossible to accommodate short workpieces between centres while at the same time obtaining a useful saddle travel or finding a mounting point for a fixed steady. This was a small price to pay for the great advantage of the unusually wide gap in the bed which allowed me to turn really hefty wheels etc. without trouble; many years ago, I machined a Stuart Sandhurst flywheel (9 in. dia. × $1\frac{1}{2}$ in. face width) on this lathe, using treadle power only — the job was too large for the narrow Myford gap!

Returning to our crankshaft, the end of the shaft nearest to the headstock is machined to within 0.010 in. to 0.015 in.

Fig. 39: Showing the use of the fixed steady to minimise flexing of the crankshaft whilst it is machined to size. Note that the headstock centre is held in the three jaw chuck, to increase the rigidity of the set-up and to enable more comfortable machining operations.

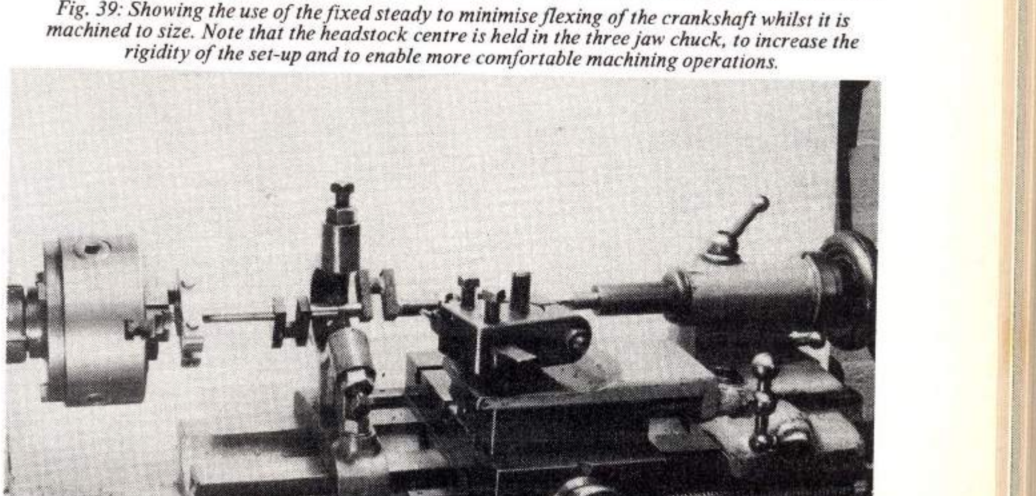

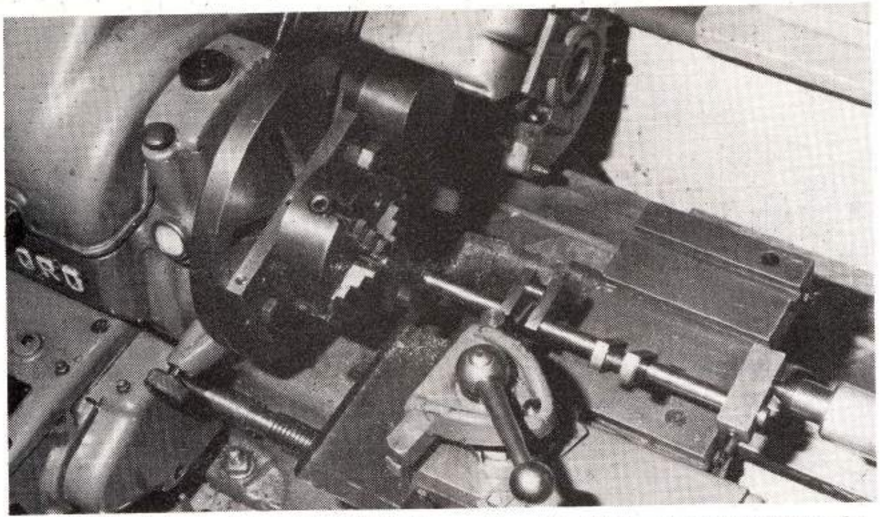

Above, Fig. 40: Use of a faceplate fixture for machining the crankpins.

of its finished size and the steady is then mounted so as to support the machined portion as near to the left hand crank web as possible. The next section of the shaft between two cranks is then similarly machined and the steady moved to this position in readiness for machining the next section, this procedure being repeated for the final shaft section. The reason for leaving the shaft slightly oversize at this stage is to permit the later correction of any slight distortion which might arise during the turning of the crankpins.

For the actual cutting operations, a pair (L.H. & R.H.) of tools was made from $^3/_{16}$ in. dia. silver steel, these being mounted in turn in a $^5/_8$ in. square holder. The cutters were arranged to project about $1^1/_4$ in. from the holder and were set very slightly below centre height, so that should any tendency to "dig in" arise, the tool would spring away from the work rather than distort the latter. The tips of the cutters were slightly radiused to provide the fillets and were set so that the sides of the webs could be cleaned up.

After completing this preliminary machining, it is advisable to offer the shaft to the completed bedplate and bearings to check the longitudinal spacing of the cranks. The centre crank should fit snugly between its bearings, while the two outer cranks should show about 0.01 in. either side.

To machine the crankpins, I prefer to use a faceplate fixture which will hold the shaft rigidly at one end, the traditional throw plate being used at the tailstock end only. My fixture consists of a small 4-jaw chuck mounted on a flat base which is in turn bolted to the faceplate and set to produce the necessary crank throw ($^3/_8$ in.). Fig. 40 shows a crankpin being turned, using the same slender tools as previously described. The pins and web sides are finished to size at this setting, small finishing cuts and keenly honed tools being necessary to achieve the desired surface finish.

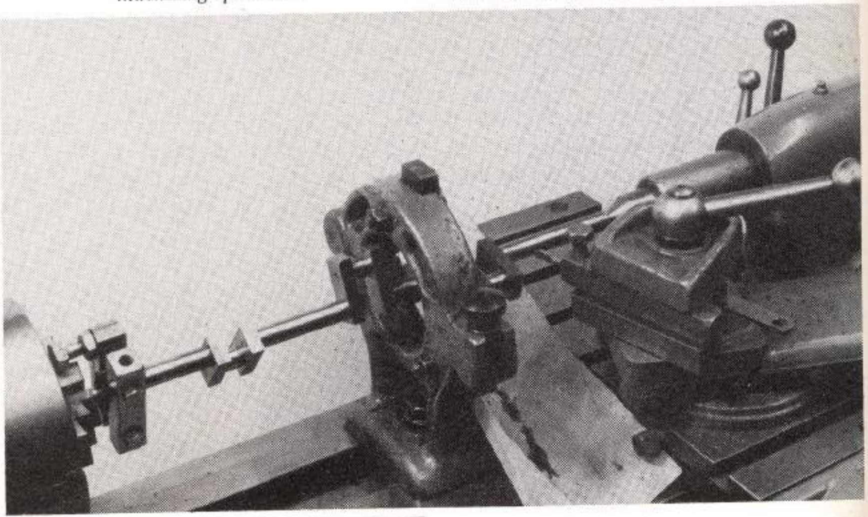

Below, Fig. 41: The final turning operation on the crankshaft; in this instance a steady is again used to minimise flexing of the shaft during the machining operation.

When all pins have been completed, the work is re-mounted between shaft centres and the various sections of the shaft carefully reduced to their finished size, using a fixed steady to support the work as appropriate. It is sometimes advocated that for this operation, the spaces between the webs are packed solid to avoid distortion due to centring pressures, but with careful use of a fixed steady I have never found this necessary. If such packing blocks are employed, I recommend they be made an easy fit between the webs and soft soldered into position; simple wedging into position is liable to introduce more distortion than it is intended to prevent. Fig. 41 shows the final turning operation in progress. Incidentally, the bronze pads of the Myford steady are a distinct advantage at this stage, since there is far less chance of the work being marked than when using hardened screws or pads. *To be cont'd.*

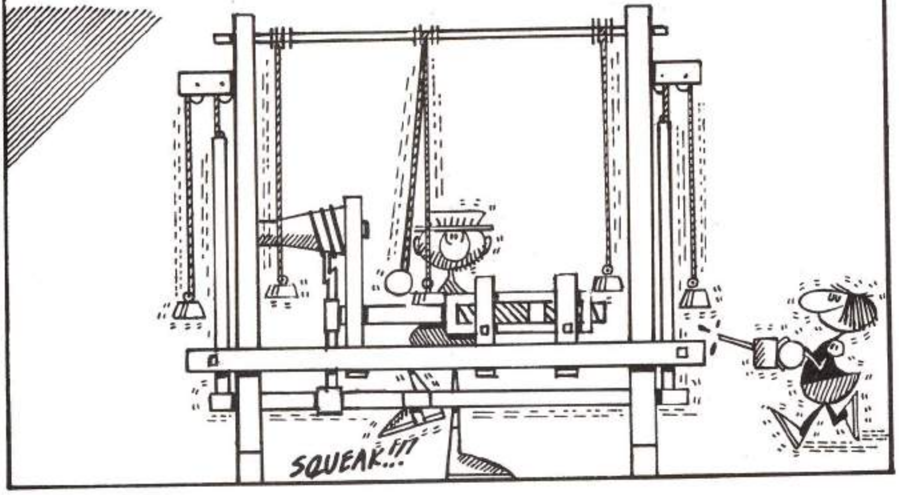

A Marine Triple Expansion Engine

The O. B. Bolton design updated
by J. P. Bertinat

Part XI *From Page 552*

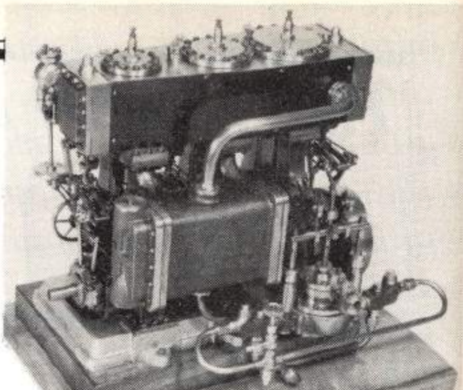

Photo: A. J. Reeves & Co.

Last time we dealt with the making of the crankshaft and main bearings. We now turn to the connecting rods.

Connecting Rods

These are very similar to those I described some time ago for the *Warrior II (Model Engineer* 5 December 1980, p1458), but as an alternative to machining from 1in. dia. steel bar, I used a built up construction for the steel rod, big end palm and small end fork. Fig. 42 shows the dimensions for a pair of built-up rods before machining. By making the role in back to back pairs, all the milling associated with the small end forks may be accomplished while the parts are still easy to hold and turning centres are only required at the big ends, these turning centres are more easily drilled before the parts are assembled. In the case of the third rod, a dummy extension to the small end can be incorporated, but I actually made up four rods, using the spare for a Stuart No. 4 engine, this spare replacing the cast gunmetal rod supplied with the Stuart kit. Fig. 43 shows the connecting rod parts before assembly and turning; it will be noted that I have carried out a further milling operation not shown in Fig. 42, viz. the milling of the lower ends of the small end forks to their final thickness of $\frac{5}{16}$ in.

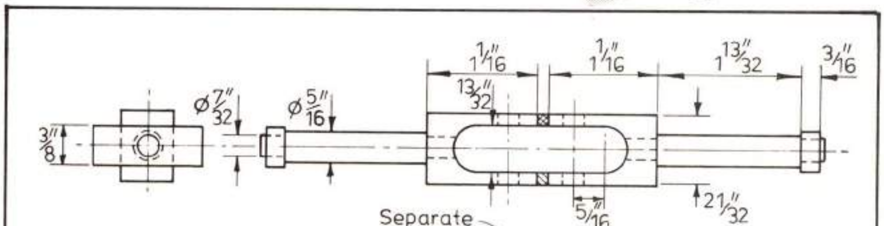

Fig. 42 COMPONENTS OF BUILT-UP CONNECTING RODS ©

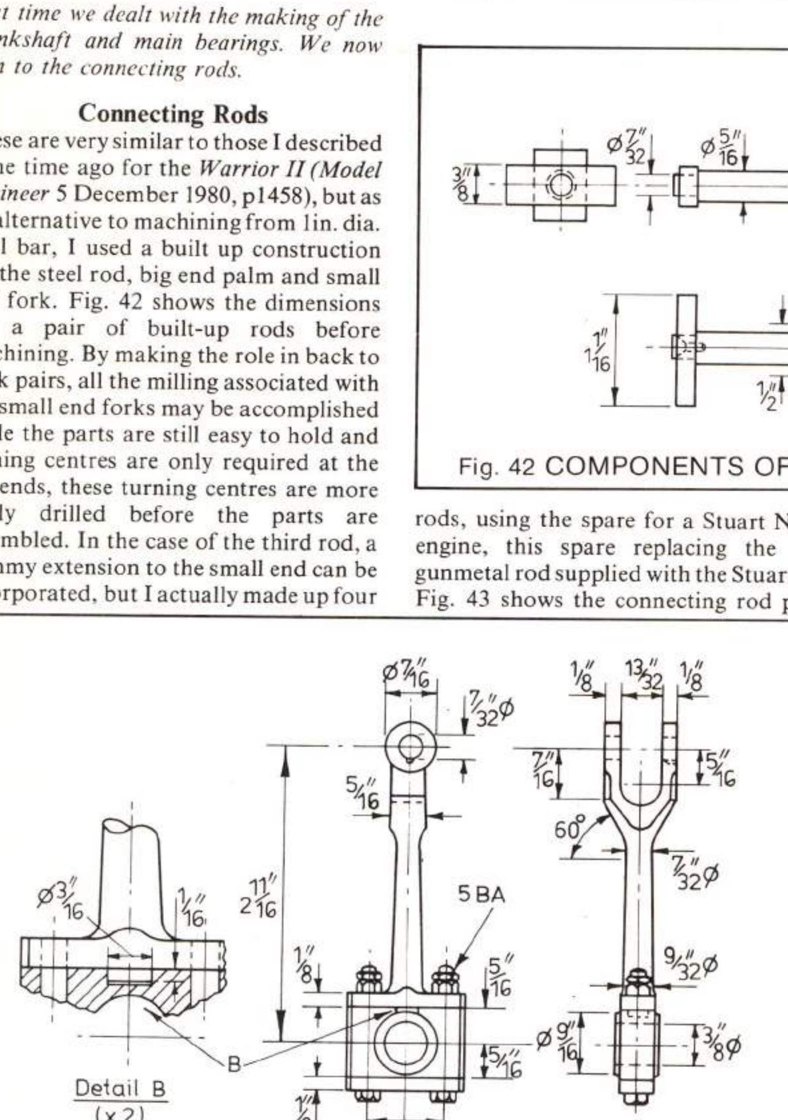

CONNECTING ROD: 3 off
Rod & cap — mild steel
Bearings — gunmetal
©

Some builders may wish to machine from the solid and, on balance, the difference lies more in the amount of swarf produced rather than in the total time taken. Whichever method is taken to produce the roughed out shape of Fig. 43, subsequent operations are similar. The rods are turned to the dimensions shown on the drawing, the tapers on the shank of the rod (approximately $1\frac{1}{2}$ deg. with centre-line) and on the small end fork (30 deg. with centre-line) being obtained by topslide settings. The edges of the big end palms are left oversize for the time being since they are finished later in conjunction with the bearing brasses.

For locating the brasses on the rods, a small spigot $\frac{3}{16}$ in. dia. × $\frac{1}{16}$ in. long is formed on the end of the rod, this spigot fitting into a corresponding recess formed in the top of the bearing brass. At this stage it is advisable to leave this spigot slightly oversize so that it can be turned later to a close fit in the bearing brass. The rods are not yet separated because they will need to be re-mounted between centres for finishing the brasses and bearing caps.

Big End Brasses

The three big end bearings come as a single gunmetal casting, and I suggest a preliminary light machining operation along each of the long edges to bring these straight and parallel and to provide a datum, but still leaving them oversize. A shaper, miller or 4-jaw chuck in the lathe will serve for this work. Next, the casting is separated into its six bearing halves, this operation being carried out with the aid of a thin slitting cutter in the milling machine (the last piece might be difficult to hold!) or by careful hacksawing. The joint faces of the bearings are now trued up by mounting in a 4-jaw chuck and taking a light facing cut off each (this operation should not be necessary if the parts have been separated with a sharp slitting cutter); these faces are now tinned and sweated together, producing three whole bearings.

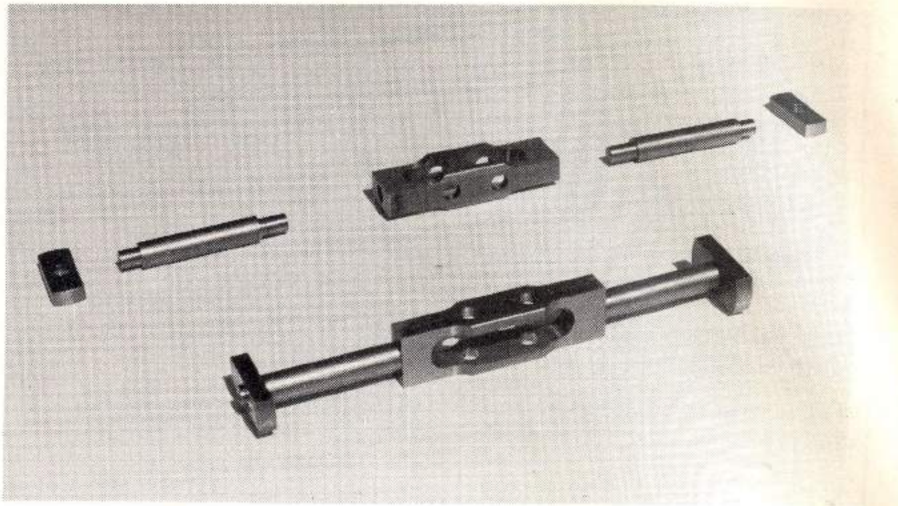

Fig. 43: The components of the built up connecting rod made by the Author.

Next, the bearings are mounted in turn in a 4-jaw chuck, a light facing cut taken over an end face, and then drilled, bored and reamed $\frac{3}{8}$ in. dia. At this stage the final facing should not be carried out since as large a surface as possible is desirable to locate the work for later finishing of the top surface which is to assemble on the rod. This top face, which must be truly parallel with the bore, may either be milled, in which case it will be done at the same setting as used for drilling the bolt holes, or turned. In the latter case, The bearing brass is mounted on an angle plate by a bolt through its bore, the machined side face locating firmly on the angle plate which latter is then mounted on a faceplate. It might be found that with the normal slotted angle plate, it is not possible to clamp the work sufficiently close to the edge of the plate, and for such work I use the smallest Myford angle plate which is supplied with one face plain, and can be drilled and tapped as required for mounting small components near to its edge.

At this same setting, the bottom edge of each bearing can be machined to size by simply rotating the bearing through 180 deg. on its mounting screw; parallelism of the two faces is assured by inserting a parallel strip between the face-plate and the already machined top face (do not forget to remove the parallel strip after tightening the bolt and before starting the lathe!).

Next come the holes for the big end bolts which I usually co-ordinate drill using either a vertical milling set-up or a vertical slide on the lathe. If using the latter method, the vertical slide is set up facing the lathe chuck and a machine vice mounted and lined up so that its fixed jaw is truly parallel with the lathe cross slide (i.e. nominally horizontal). A bearing is clamped in the vice with its machined side locating on the fixed jaw and its top edge facing the lathe chuck (Fig. 44); by means of a pointed rod in the chuck, the slides are adjusted so that the centre of the top edge of the bearing coincides with the lathe centre. At this setting, the hole for the locating spigot is centred and drilled $\frac{11}{64}$ in. dia. to a total depth of $\frac{1}{16}$ in., following with a $\frac{3}{16}$ in. slot drill for a depth of $\frac{5}{64}$ in. The bolt holes are located at $\frac{17}{32}$ in. on either side of this centre and may be positioned with reference to cross slide index dials, not forgetting to take account of backlash. It is highly desirable that the big end bolts are a good fit in these holes; 3.2mm (0.126 in.) is the correct size for 5 BA.

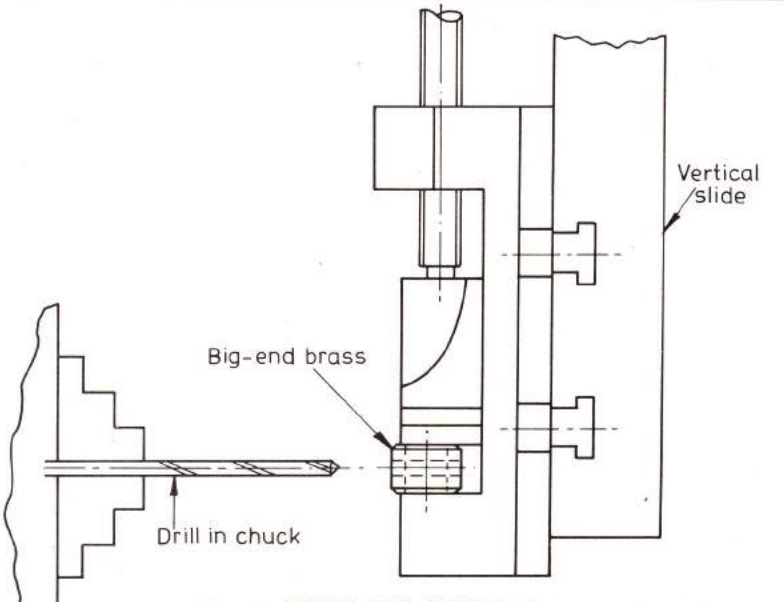

Fig. 44 DRILLING FOR BIG-END BOLTS

Having drilled all bearings, temporary bolts may be put through the holes to reinforce the soldered joint, and the bearings mounted on a stub mandrel for preliminary facing of their other sides. Next, the spigots on the connecting rods are finished to a close fit in the recesses in the bearings and the two parts clamped together for spotting the bolt holes into the rods. Before finally clamping, straight lengths of $\frac{7}{32}$ in. and $\frac{3}{8}$ in. dia. material are put through the respective bearings to ensure that they are parallel. The lower bearing caps are prepared from $\frac{1}{8}$ in. thick bms, and are left overside in profile for finishing with the connecting rod assembled, their holes being located from the bearing brasses.

The big end bolts are best made up as specials, in order to ensure a close fit in the holes. In marine engine practice, connecting rod boltheads were usually cylindrical and were provided from rotating by small 'snugs' similar to those presently provided for the I.P. and H.P.

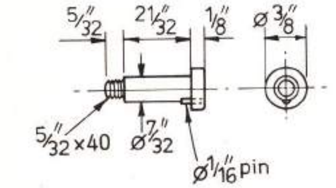

CROSSHEAD PIN. H.P. & I.P.
2 off m.s. case harden

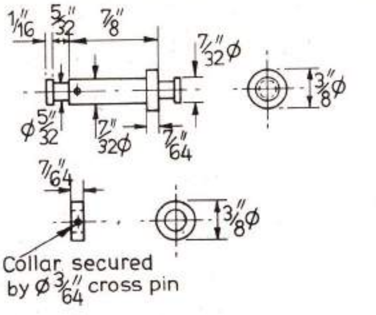

Collar secured by ø3/64" cross pin

CROSSHEAD PIN. L.P. 1 off
mild steel — case harden

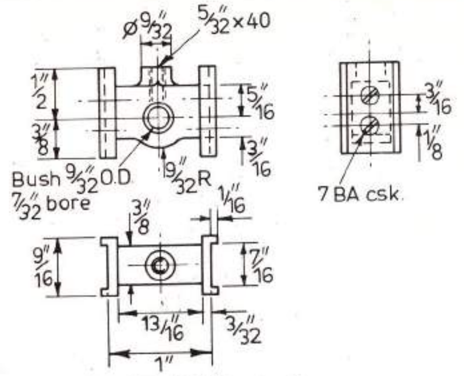

CROSSHEAD: 3 off
Centre — mild steel
Bush & slippers — g.m.

©

crosshead pins, but since they are not readily seen in our model, we can get away with hexagon bolts. When making up special nuts and bolts, I usually employ hexagon bar one size below standard, since the smaller nuts and bolts heads approximate more closely to scale dimensions.

The 1 in. outer diameter of the bearing brasses, the palms of the rods and the bearing caps need to be turned as a single unit for each rod, and for this purpose an accurate centre is required in the lower bearing cap. My method of obtaining concentricity of all parts of the rod is as follows:

i) Mount the rod (ex bearings) between centres.
ii) Apply fixed steady to rod, as near tailstock end as possible.
iii) Open steady (without disturbing setting of locating pads) and withdraw rod.
iv) Assemble bearing and cap at tailstock end and return work to lathe, supporting by headstock centre and steady.
v) Centre drill cap from tailstock end.

Fig. 45: Using the vertical mill and rotary table to machine a connecting rod.

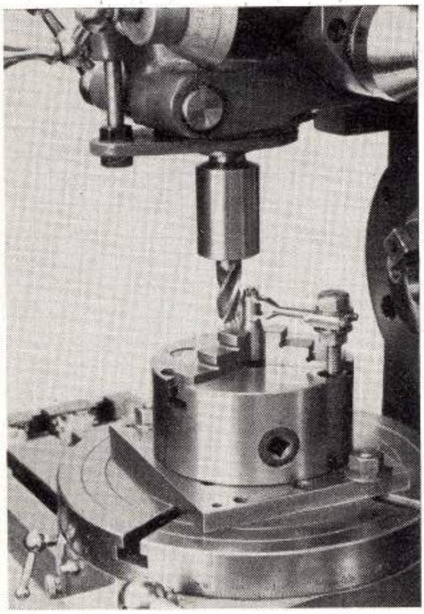

The complete assembly may now be remounted between centres, the steady removed and the 1 in. diameter turned on the three parts. Between centres turning having now been completed, the rods may be separated at the small end fork and the side faces of the bearing, rod and bearing cap finished on the previously used 3/8 in. mandrel. The remaining operation on the rod, viz. the rounding of the outside of the small end fork, may be carried out with the aid of a circular table on a vertical miller (Fig. 45 shows this as applied to the *Warrior II)* or with similar equipment, or even by filing using filing buttons 7/16 in. dia. having 7/32 in. dia. spigots to fit the small end bores.

Crossheads

These are of built-up construction, having a steel centre block to which are screwed gunmetal slippers. The three steel centre blocks will be easier to hold and to machine accurately if they are made from a single bar and separated at the latest possible stage. A 3 in. length of 3/8 in. × 1 in. bms should have its width reduced to 13/64 in. by shaping or milling, taking care to get the machined edges parallel and square. To reduce the possibility of distortion during machining, it is again advisable to normalise the material first, and to carry out the width reduction by removing the same amount of material from each edge.

On the face of the bar, the main dimensions of each of the three parts are marked out and the 9/32 in. holes for the crosshead pin bushes drilled and reamed. The bar is now held axially in the 4-jaw chuck and very carefully centred, using an indicator on the faces. Note that when using an indicator for centring rectangular components it is most important that the stylus of the indicator is in line with the lathe centres in plan view (i.e. in the fore and aft direction), and that the work is rotated slightly each way to obtain a minimum reading. In the present case, and assuming a 1/16 in. radius on the stylus, a plan view displacement of 0.05 in. could cause an error of about 0.005 in. in the minimum reading when centring in the direction of the 3/8 in. thickness and about half this amount on the 13/16 in. dimension. A height gauge with its horizontal reference face provides a more reliable, although more sophisticated, method of checking. After centring, the end may be faced off to 1/2 in. from the nearest hole centre, turned to 9/32 in. dia. for a length of 3/16 in. and drilled and tapped 5/32 in. × 40 t.p.i. for the piston rod. This drilling can be allowed to break into the hole for the crosshead pin since the latter is to be bushed; by so doing, the necessity of drilling and tapping a blind hole is avoided.

One crosshead centre is now sawn or parted off and the above procedure repeated on each end of the remaining bar, thus forming the two remaining parts. The undersides of the blocks are now shaped as per drawing, and gunmetal bushes fitted to the crosshead pin holes. I often use discarded chucking pieces for making such bushes, turning them to 0.0015 in. oversize and putting a slight lead on one end to facilitate the pressing in for which I use a hefty machine vice with parallel jaws. The holes will need re-reaming on account of the closure which has taken plate during the pressing in and, if this pressing in has been carried out correctly, the bushes should not move under the torque of the reamer. For preference, this reaming should be carried out in a drilling machine or tapping fixture, with the work squarely held, to avoid the possibility of mis-alignment.

I made the slippers or guide strips from

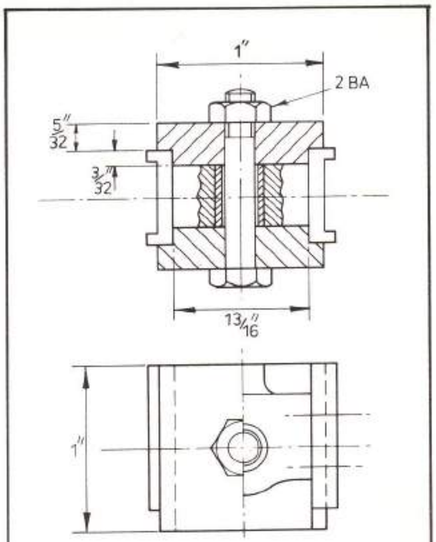

CROSSHEAD ASSEMBLY FIXTURE ©

cast gunmetal bar (ex the scrap box and after considerable use of the hacksaw). The material is shaped or milled, in lengths not exceeding 2 in., to the correct section viz. 9/16 in. × 5/32 in. and the 7/16 in. wide groove milled with a really sharp cutter. It is recommended that a 1/4 in. or 5/16 in. dia. cutter is used for this purpose, dealing with the two sides of the groove separately. It is, of course, important that the dimension of 3/32 in. from the bottom of the groove to the back of the slipper is maintained; slight imperfections in this direction can be made good by careful filing at the erection stage.

Finally the 7 BA clearance holes for the fixing screws are drilled and countersunk. For mounting the slippers accurately on the crosshead centres, a simple fixture consisting of two rebated plates is made up as shown in Fig. 46. The fixture clamps the parts together centrally and in perfect alignment while the fixing holes are spotted through into the body, and the fixture may be supplemented by a toolmakers clamp across the faces of the slippers.

At this stage we can return temporarily to the main standard/cylinder assembly and, after screwing the crossheads firmly to the piston rods, the guide bars may be positioned and aligned on the standards.

Crosshead pins

For the H.P. and I.P. crossheads, the pins take the form of circular headed bolts, shouldered down from their shank diameters of 7/32 in. to 5/32 in. dia. and threaded 5/32 in. × 40 t.p.i. for the retaining nuts; these latter are not detailed, but are made from 1/4 in. A/F hexagon steel and are 1/8 in. thick. The bolts are prevented from rotating by 1/16 in. dia. pins or snugs, the holes for these pins being drilled axially from the head end of the bolt at a distance of 7/64 in. from the bolt centre. Before drilling, the bolts are assembled in their respective connecting rods and marked for identification during subsequent assembly. The holes are drilled to penetrate 3/32 in. into the eye of the connecting rod and note that they are arranged on the lower, or inner, edge of the crosshead pin hole so as not to weaken the eye of the rod. I prefer to turn the pins from 3/32 in. dia. rod; the end which penetrates the connecting rod eye is rounded and reduced to 0.06 in. dia. for easy assembly, while the upper 1/8 in. of the length is made a press fit in the bolt head. If, as noted on the drawing, the crosshead pins are to be casehardened, the holes for the 1/16 in. pins should, of course, be drilled before hardening, but the fitting of the pins should be left until afterwards.

The pin for the L.P. crosshead is of different construction since it incorporates extensions to form journals for the rods driving the pump rocket arms. Making the pin is a plain turning job; the flange at the end where the pin enters the crosshead is turned 0.002 in. below the nominal dimension to facilitate assembly, while the main shank is a light push fit in the crosshead. The grooves which form the journals are formed with a narrow parting tool, taking several plunge cuts to obtain the necessary width and finally feeding laterally to produce a parallel section of 5/32 in. dia. and width. The pin is retained in the crosshead by a plain collar 7/64 in. wide, secured by a 3/64 in. dia. cross pin. *To be continued*

LBSC MEMORIAL BOWL COMPETITION 1986

To be held on Sunday 7th September 1986 by permission of the Sunderland Model Engineering Society Ltd., at Roker Park, Sunderland.

The Competition is for Steam Locomotives of 2½, 3½ and 5 inch gauges built to the designs of the late LBSC.

Prizes to be awarded are:

First Prize — the Memorial Bowl and, providing six or more enter, additional prizes will be awarded as follows: First £15.00 Second £10.00 Third £5.00.

Applications for Entry Forms should be made to the address below; it will be first come first served and it may be necessary to limit the number of entries. Closing date for entries is the 15th August 1986 and full conditions for the Competition will be included with the Entry Form and are available on request.

Applications for Entry Forms to: The Exhibition Manager, Argus Specialist Exhibitions Ltd., P.O. Box 35, Wolsey House, Wolsey Road, Hemel Hempstead, Herts. HP2 4SS. (Please mark envelope "LBSC Bowl").

A Marine Triple Expansion Engine

The O. B. Bolton design updated by J. P. Bertinat

Part XII *From Page 681*

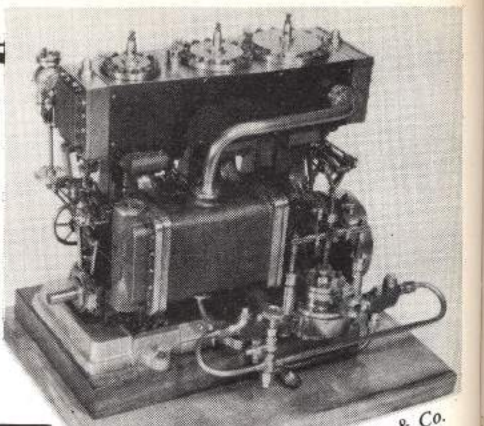

Photo: A. J. Reeves & Co.

Eccentric Sheaves

As these form part of the valve gear, some may consider it out of place to discuss them at this stage, but my excuse is that I thought it desirable to cover all parts associated with the crankshaft assembly while the latter is fresh in our minds. Dealing first with the H.P. and L.P. sheaves, these may readily be machined from 1 in. dia. b.m.s. bar, turning to the external dimensions given and then parting off, leaving the shaft hole to be tackled later. The reason for the 0.256 in. dimensions is that the main body of the eccentric straps will be $\frac{1}{4}$ in. wide with a 0.005 in. annular projection on the inner face to localise the rubbing contact between the two straps. A simple fixture may be made to hold the sheaves for drilling and reaming the bores, this consisting of a piece of $\frac{5}{16}$ in. b.m.s. plate bolted to the faceplate, bored $\frac{13}{16}$ in. dia. and locally faced to accept the sheaves. After boring, this plate is moved on the faceplate through a distance of $\frac{9}{64}$ in. to provide the $\frac{9}{32}$ in. valve travel and then re-clamped. Using ordinary faceplate clamps, each sheave in turn is clamped in this fixture and drilled and reamed $\frac{3}{8}$ in. dia. to fit the crankshaft.

For the split sheaves of the centre or intermediate pressure eccentrics, I started with two pieces of b.m.s. $\frac{3}{4}$ in. thick and 1 in. long and of widths $\frac{3}{8}$ in. and $\frac{5}{8}$ in. respectively. Using the special 6 BA screws detailed on the drawing, these two blocks were screwed together, the holes for the screws having been carefully marked out so that they would finish up in the correct position on the finished sheaves. This block, from which two eccentric sheaves may be turned back to back, is shown in relation to the finished parts in Fig. 47. On one face of this block, the shaft centre is marked out on the dividing line of the material and exactly midway between the screw centres; at $\frac{9}{64}$ in. from this, the sheave centre is marked out and lightly but accurately centre-popped. From this centre, a guide circle of 1 in. dia. is marked out, after which the corners of the block are sawn off to reduce the amount of "thumping" at the initial stages of the turning operation.

The block may now be mounted in a 4-jaw chuck and set with the sheave centre running truly, with the end face square and with just over $\frac{3}{8}$ in. of the $\frac{3}{4}$ in. thickness projecting from the jaws. The outside is now reduced to $\frac{15}{16}$ in. dia. up to the chuck jaws and then to $\frac{13}{16}$ in. dia. for a length of 0.256 in. from the faced end. The work is now transferred to a 3-jaw chuck, being held by the $\frac{13}{16}$ in. dia. section, using a split ring made from a slice of brass, copper or aluminium tube to avoid bruising the finished surface. The now projecting end is given the same treatment as the first end, and with a parting tool, a groove no more than $\frac{1}{8}$ in. deep is formed to indicate where the parts are finally to be separated. As a precation, I recommend that the work is supported by the tailstock centre for this operation since we are only gripping a length of 0.256 in. in the chuck. If only a small centre hole is made for this support, it will be machined out when the shaft bore is made. The pair of eccentrics can then be clamped in the face plate fixture already used, taking care to position the work so that the previously marked shaft centre runs truly. The hole for the shaft is then drilled undersize and then opened out with a small boring tool and finally reamed $\frac{3}{8}$ inch. The boring operation is a necessity here since both the eccentric sheave centre hole and the dividing joint at shaft centre will cause the drill to wander. The amount of this wandering may be reduced if a centre drill having a $\frac{5}{16}$ in. dia. shank is used to start the hole and is fed in deeply, so that most of the offset sheave centre is then drilled away before an ordinary drill is used. Finally the two sheaves may be sawn apart, using the previously turned groove as a guide, and faced to finished length.

All sheaves are now drilled and tapped for the 6 BA socket grub screws, and it now remains to set the pairs of eccentrics in their correct relative positions. As has been mentioned on previous occasions, there is only one eccentric setting which will give satisfactory valve events and for a given valve travel, this is determined solely by the lap and lead given to the

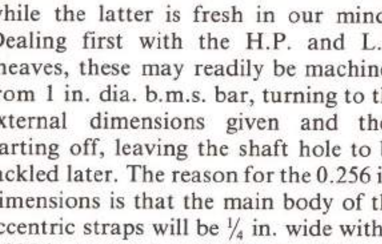

ECCENTRIC SHEAVES H.P. & L.P.
4 off m.s.

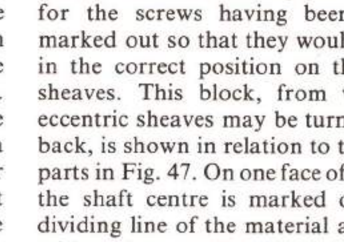

ECCENTRIC SHEAVES I.P.
2 off m.s.

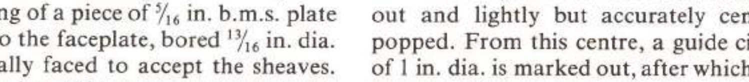

ECCENTRIC SETTING DIAGRAM

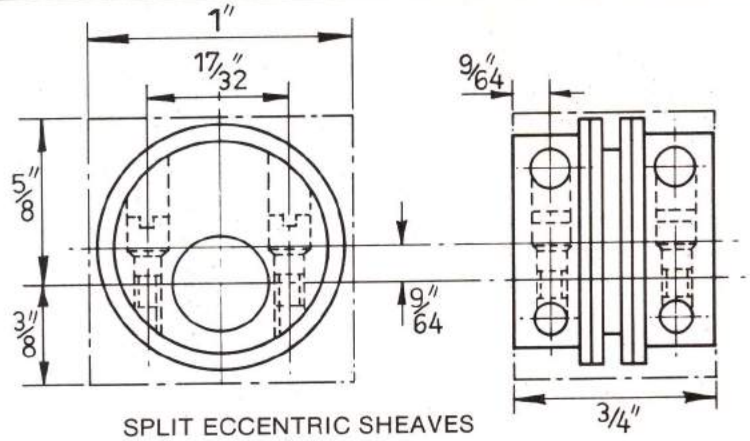

SPLIT ECCENTRIC SHEAVES
Fig. 47

slide valve; hence the dimensions given on the valve setting diagram drawn immediately below the drawing for the eccentric sheaves. The eccentric setting is the same for both forward and reverse gear, and hence the sheaves are set symmetrically with respect to the appropriate crank arm. It is thus only necessary to establish the correct relative positions of the two sheaves, lock them together and finally assemble the unit on the crankshaft at right angles to the adjacent crank. The relative setting is readily achieved by using a set up similar to that shown in Fig. 48. A pair of sheaves is mounted on a 3/8 in. dia. mandrel held in a three jaw chuck. A vertical slide-angle plate combination is set up; with a small parallel strip (say 3/8 in. square) resting on the angle plate, the slide is raised until the parallel just touches the mandrel. After taking up back lash in the feed screw, the index reading on the vertical slide is noted, after which the slide is wound down an amount equal to the setting distance X = 0.270 in. (see drawing for derivation of this figure). The sheaves are now placed on the shaft and their working circumferences allowed to rest on the parallel strip. The sheaves are now in their correct relative positions and may be clamped together and drilled for a small pin or screw. Do not forget that the three pairs of sheaves should be assembled the same way round.

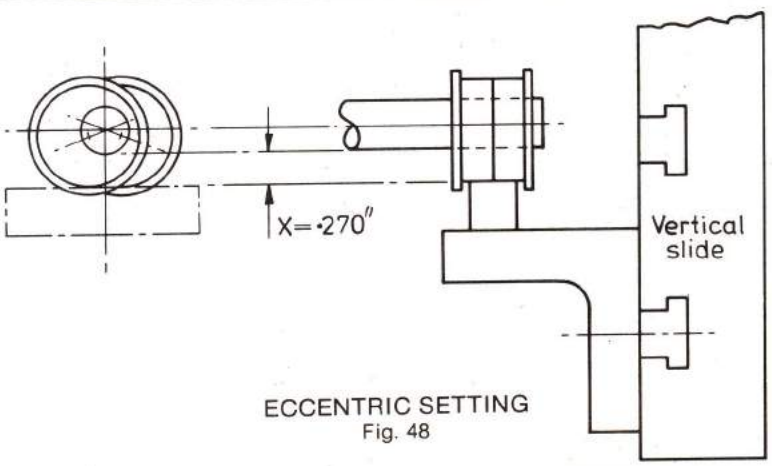

ECCENTRIC SETTING
Fig. 48

Flywheel

The casting is first set up in a 4-jaw chuck, recessed side outwards, and the cast recess, set to run as truly as possible. The wheel is then faced, drilled, bored and reamed for the 3/8 in. shaft, and as much of the rim as is clear of the chuck jaws is machined. At this setting, if it is not intended to machine the cast recess, I usually chamfer the inner edge of the rim and the edge of the boss; this helps to conceal any run-out of the casting. The work is now reversed in the chuck, taking care that the machined edge is pushed well back against the chuck jaws, and carefully centred, thus enabling the flat face and the remainder of the rim to be machined. Unless the centring operation is perfect, the two stages of machining of the rim will show where they meet, and the wheel will need to be mounted on a stiff mandrel for a final light cut across the rim. The flat outer face of the wheel forms a convenient mounting point for a flange or pin coupling to connect the engine to the propeller shaft via a thrust bearing.

It will be noticed that the drawing calls for a drilling through the rim of the flywheel for the 4 BA tapped hole for the socket grub screw by which the wheel is attached to the crankshaft. I prefer this to the often used practice of putting the hole through the boss at an angle in order to clear the rim; such skew fastenings tend to work loose. Some builders may prefer a key fastening for the flywheel and, if this is adopted, a key made from 3/32 in. square silver steel would be appropriate. For ease of dismantling a headless key, it is not tapered, but may be held in position by a 6 BA socket grub screw occupyin the same position as the 4 BA screw specified for fixing and locating on the top of the key; this is similar to the method adopted for securing the driving pulley to the spindle of an electric motor.

The next item to be tackled will be the pump unit, this being dealt with before the valve gear, since erection of the engine structure cannot be completed until all holes for the pump mounting have been drilled. *To be continued*

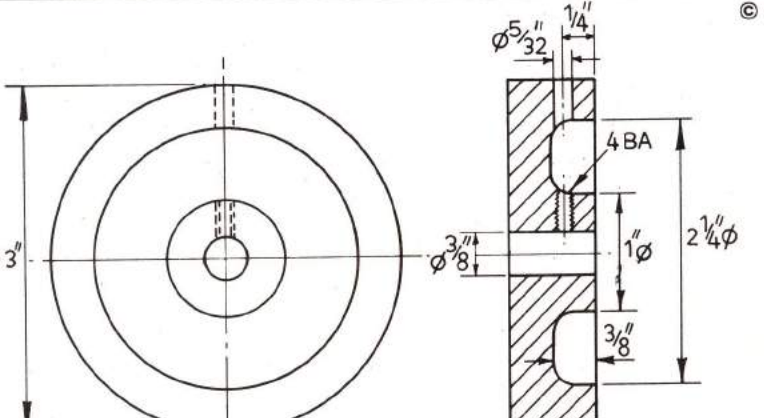

FLYWHEEL: 1 off
cast iron

A Marine Triple Expansion Engine

The O. B. Bolton design updated by J. P. Bertinat

Part XIII *From Page 85*

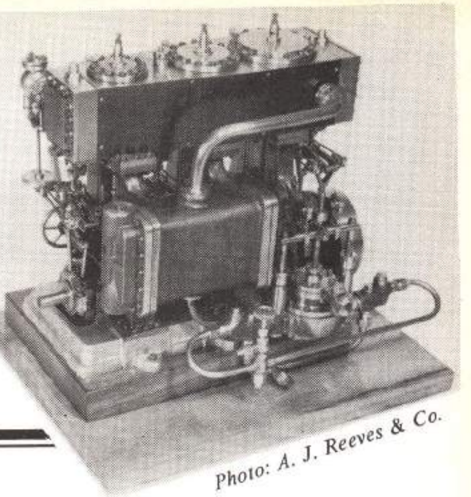
Photo: A. J. Reeves & Co.

Pump Unit

This assembly, incorporating the twin boiler feed pumps and the extraction or air pump is shown in elevation on the accompanying drawing and also in the end elevation of the engine general arrangement; the pumps also appear prominently on the engine photograph (Fig. 2). The air pump is of the Edwards type in which there is only one internal valve, viz.; the disc valve at the top of the cylinder, the lower or suction valve being formed by the piston uncovering ports at the bottom of the cylinder. As an assurance against leaking of the disc valve, I have added an external check valve at the pump delivery, but this may be regarded as an optional extra. The twin feed pumps, fitted on either side of the air pump, are of generous capacity and one alone should supply the normal requirements of the engine, but in order to preserve a balanced load on the pump crosshead assembly, it is desirable to use both as feed pumps and to control the output with a bypass valve; this latter and the associated pipework will be described towards the end of the series.

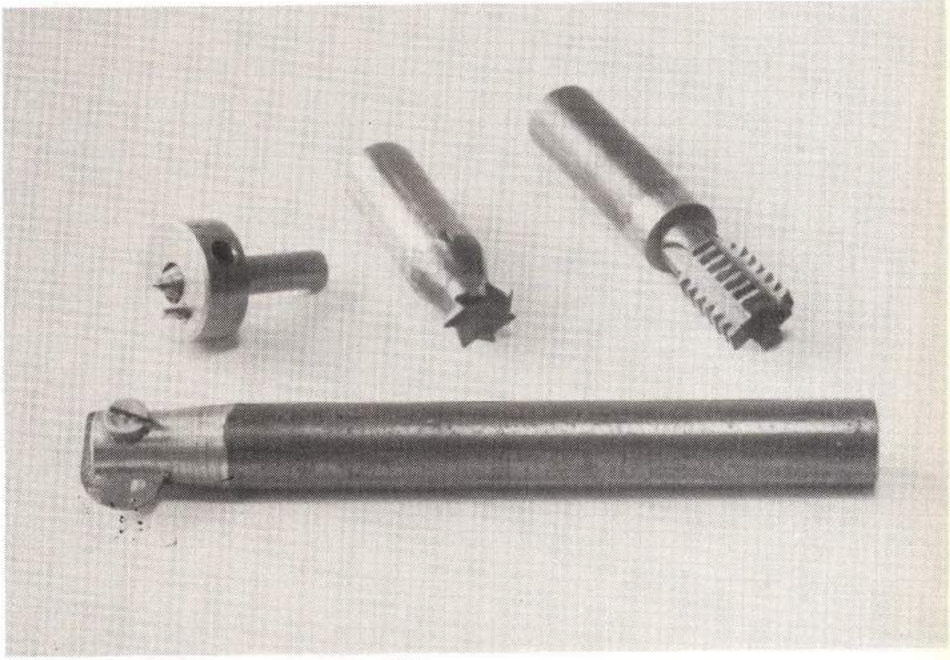

Above, Fig. 50: A chambering tool, special centre and carrier for turning eccentric rods, and hobbing tools.
Below, Fig. 49: Chambering out the pump base.

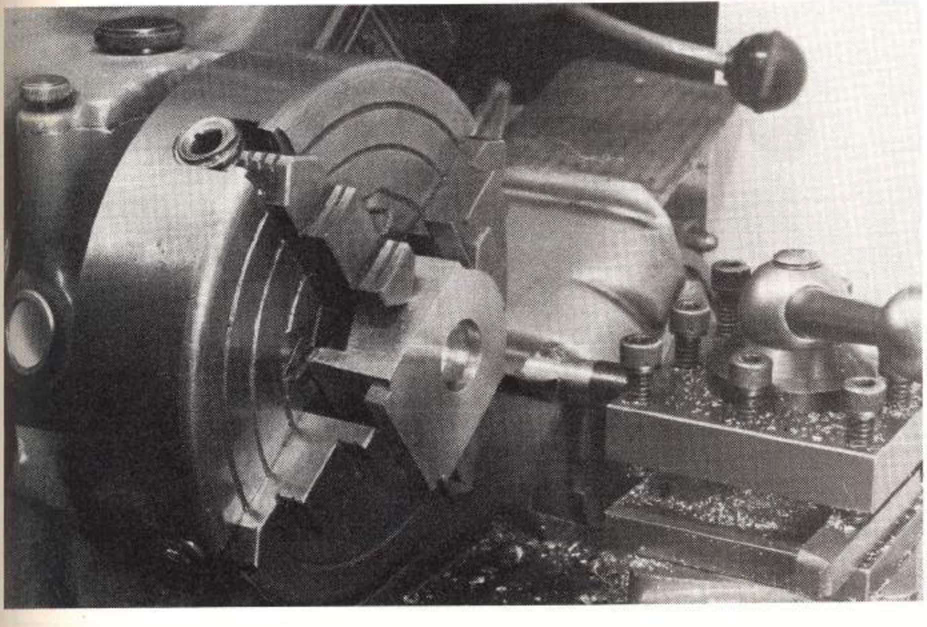

Air Pump Base

The first job on this casting (after general cleaning up) is to mark out the centre lines of the bore on the top face, the cast depression in this face is apparently in the correct position, but it is preferable to work from marked centre lines as the machining allowance on the $1\frac{3}{4}$ in. width is rather small. The work is then carefully set up in a four jaw chuck, with the top face accurately centred to the marked lines. At this setting, the cylinder mounting surface is machined, the $\frac{25}{32}$ in. dia. hole bored to a depth of $\frac{5}{8}$ in., and the hole then chambered out to form the transfer passage (this operation is shown in Fig. 49). For this recessing operation I made a special cutter, filed from $\frac{1}{8}$ in. thick gauge plate and slotted into a mild steel shank; the bottom edge of the cutter was suitably relieved to enable it to be used to cut the 15 deg. slope at the base of the hole, the top slide of the lathe being set over at the appropriate angle for this purpose. The cutter is shown in action in Fig. 49 while Fig. 50 shows the cutter

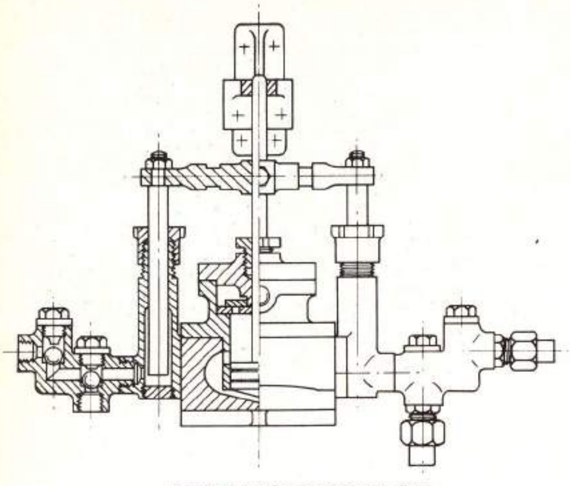

ARRANGEMENT OF PUMP UNIT
(see also Engine G.A.)

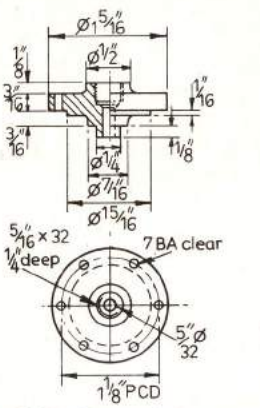

PUMP CYLNDER COVER:
1 off g.m.

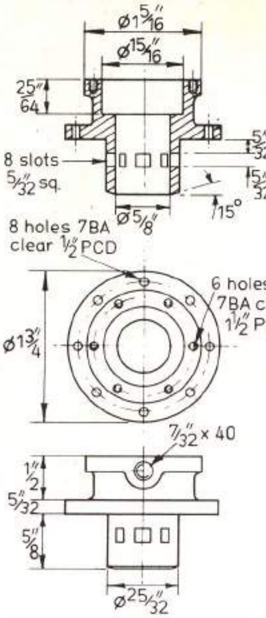

AIR PUMP CYLINDER
1 off g.m.

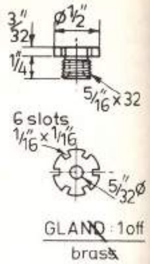

GLAND: 1off
brass

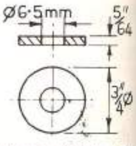

PUMP VALVE:
1 off brass

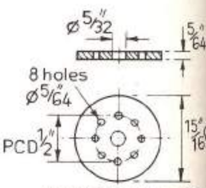

PUMP VALVE
SEATING:
1 off brass

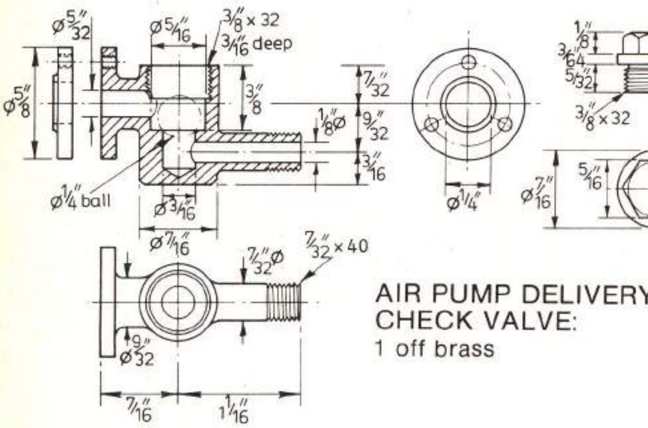

AIR PUMP DELIVERY
CHECK VALVE:
1 off brass

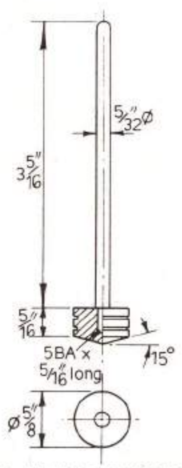

AIR PUMP PISTON:
1 off g.m. Rod st. stl.

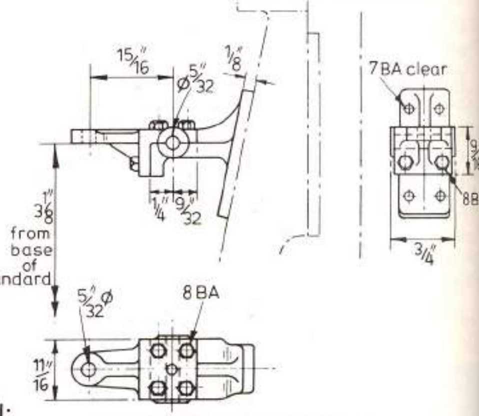

ROCKER BEARING &
PISTON ROD GUIDE

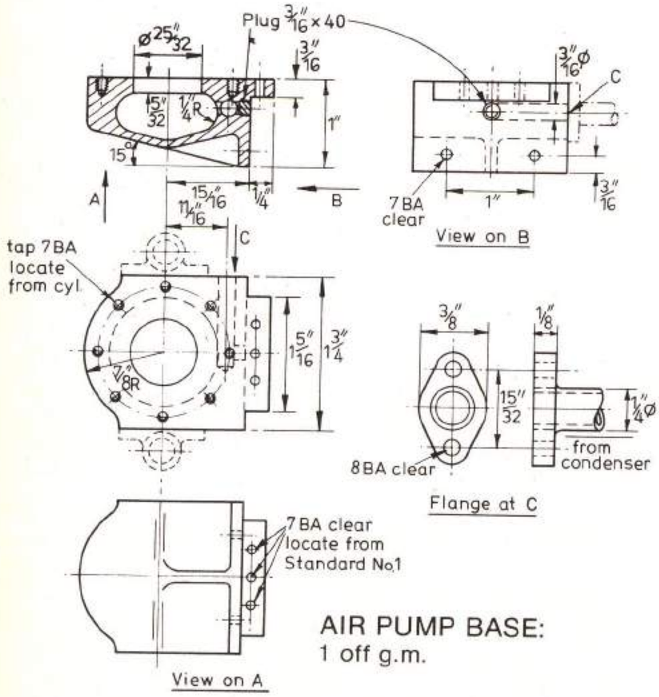

AIR PUMP BASE:
1 off g.m.

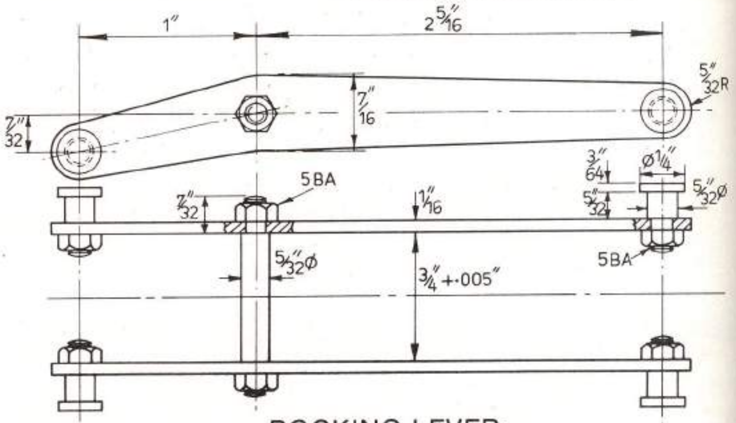

ROCKING LEVER:
1 off m.s.

©

itself together with other 'specials' made up for the job; these other specials are: 1) centre and carrier for turning eccentric rods; 2) gashing tool for roughing out teeth on reversing worm wheel; 3) hob for finishing teeth on worm wheel: all will be referred to later. For the chambering operation, the lathe should be run at 60-80 rev/min. and the tool fed in very gently.

The sides of the casting are then milled, shaped or fly-cut to dimensions, taking care to get the faces truly parallel, square with the already machined face and symmetrical with respect to the bore. Following this, the casting may be gripped by these parallel faces for milling the stepped face by which the pump unit is located on the engine framework. If only a lathe is available for this work, a vertical slide/angle plate set up may be used, the slide being set up facing the lathe chuck and the work clamped, machined top surface downwards, to the angle plate; the two side faces are dealt with using a fly-cutter while the stepped face is machined with a sharp end mill.

The drilling marked 'C' on the drawing is for the $\frac{1}{4}$ in. dia. pipe from the condenser; a short central cross hole is also drilled and its end plugged, to ensure a clear passage to the chamber of the air pump. I have introduced a flanged connection at this point and it is advisable to make and fit the flange at this stage since accessibility is restricted on the completed unit — note the proximity of the water pump mounting flange. The two 7 BA clearance holes in the vertical flange, by which the pump unit is connected to the bedplate, may be marked out and drilled, leaving the remaining holes to be spotted through from mating components.

Air Pump Cylinder

This casting may be gripped by the large (top) end in a four jaw chuck, set to run truly and the outer diameter of the cylinder turned to say $\frac{1}{32}$ in. oversize to enable the burrs to be skimmed off after cutting the ports; the bore is for the same reason machined to $\frac{9}{16}$ in. diameter. The outer flange and cylinder length may be finished to size and the lower end of the latter chamfered at 15 degrees. It is as well at this stage to check the length of the cylinder against the depth of the recess in the base; the clearance should be about $\frac{1}{16}$ in. Next the eight ports are drilled $\frac{5}{32}$ in. dia. without removing the work from the chuck, either by using a drilling spindle and a mandrel indexing device, or by transferring the chuck to a dividing head. After filing the ports to their correct shape (with the work still in the chuck), the outside of the cylinder is finished to $\frac{25}{32}$ in. dia., a sliding fit in the base. The work is now transferred to a three jaw chuck and carefully gripped by the machined cylinder for the purpose of machining the top end and finishing the bore of the cylinder to $\frac{5}{8}$ in. dia. Note that the depth of the $\frac{15}{16}$ in. dia. counterbore for the disc valve seating is important, since the cover must clamp the valve seating to form an edge seal, but not so tightly that the seating is distorted. Finally, using whatever dividing equipment is available, the eight holes are drilled in the flange at $1\frac{1}{2}$ in. PCD and spotted through into the base for tapping 7 BA in the latter. N.B. Make sure that the exit boss for the delivery check valve (tapped $\frac{7}{32}$ in. × 40 t.p.i.) is facing the correct way.

Air Pump Cover

The casting is gripped by its chucking spigot in a four jaw chuck and the outer circumference set to run truly (there is not much spare metal here) and the top face and outer edge turned. The centre hole is drilled and reamed for the piston rod and the upper end opened out to form the $\frac{5}{16}$ in. × 32 t.p.i. gland thread. Care is needed here to prevent the drill wandering as there is little room for a correcting boring tool in a $\frac{5}{32}$ in. dia. hole. I try to keep a few drills specially sharpened for brass and gunmetal; the cutting edges of these drills are lightly honed to remove the top rake provided by the spiral lead; this honing removes the tendency of the drills to snatch and dig in. The unwanted part (about $\frac{1}{4}$ in.) of the chucking spigot is then sawn off and the work mounted on a $\frac{5}{16}$ in. × 32 t.p.i. screwed mandrel for finishing the underside. As a further aid to concentricity, I suggest that this chucking mandrel is made up in situ; if it is screwcut on the end of a piece of $\frac{1}{2}$ in. dia. brass rod, it can be finished off later as the gland. The lower ($\frac{1}{4}$ in. dia.) section

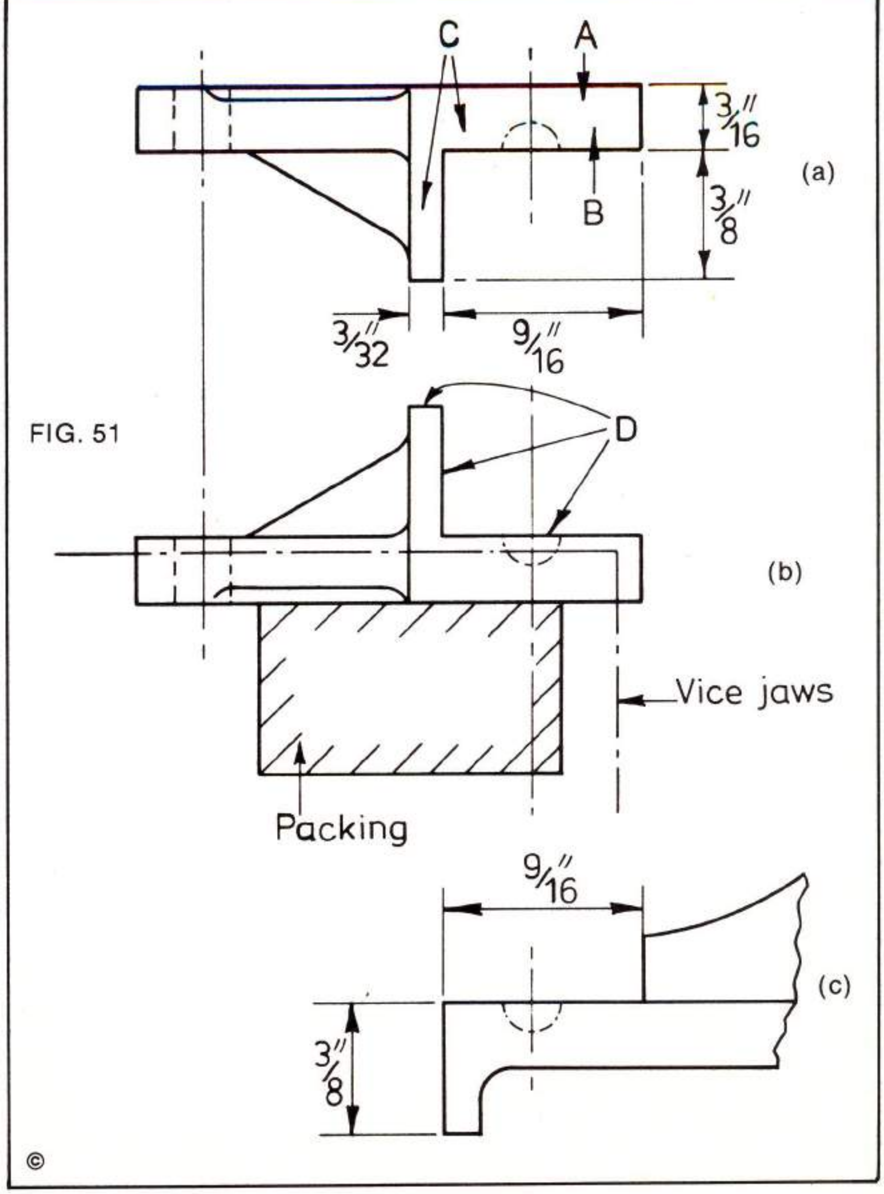
FIG. 51

of the cover serves to clamp the valve seating in place and it is advisable to leave the length slightly oversize until the valve seating has been made, so that when a thin paper jointing is placed under the top cover flange, the valve seating will be held firmly in position.

Piston and Rod

The piston is a plain turning job from brass or gunmetal bar; it has two water grooves about 0.015 in. deep to assist with the sealing and is initially turned about 0.01 in. oversize on the diameter for final finishing on its rod. The rod is from $\frac{5}{32}$ in. dia. ground stainless steel rod and is accurately centred in a four jaw chuck prior to shouldering down to $\frac{1}{8}$ in. diameter and threading 5 BA. The piston is then screwed firmly onto the rod (I use a spare lathe chuck mounted on a tailstock adaptor for gripping the piston whilst tightening) and lightly skimmed to a good sliding fit in the cylinder.

Rocker Arm Bearing and Pump Rod Guide

This item comes as two separate castings to be connected at a right angle joint by six 8 BA screws. The shape of the castings makes them awkward to hold, and for the small amount of machining required, some builders would probably carry out the necessary operations with files, but I must admit that with advancing years, I try to machine as much as possible.

Small half bosses are provided on each of the castings to form the raised bosses at each end of the rocker shaft bearing, but on checking casting dimensions, I found that there was enough metal on the width of the castings themselves to produce the required $\frac{3}{4}$ in. overall width, and the projections were removed to provide flat surfaces. Faces A and B of the upper casting (Fig. 51a) were smoothed with a file and, using paper packing between the jaws and the work, the casting was gripped in a machine vice and the end faces C carefully milled to produce an overall width of $\frac{3}{4}$ in., with the faces parallel and symmetrical with respect to the casting centre line. The casting was then inserted in a machine vice as shown in the sketch (Fig. 51b) and the remaining surfaces D machined. In view of the rather precarious work holding, I used a shaper since, with a sharp single point tool and a very light cut, I considered it less likely that the work would move than if an end mill were used. Similar methods were employed when machining the lower casting to the dimensions given in Fig. 51(c).

The two parts of the bracket are now assembled with the six 8 BA screws shown on the drawing and the hole which serves as a guide for the pump piston rod extension is drilled. For drilling and reaming the rocker shaft bearing hole, it is almost as easy to hold the awkward shaped assembly in a drilling machine vice as in a four jaw chuck; whichever method is adopted, care must be taken that the hole is square in both directions. If required, the assembly is now mounted by this hole on a $\frac{5}{32}$ in. dia. stub mandrel for forming the bosses; I did not do this, but left the sides flat at $\frac{3}{4}$ in. width as assembled.

Last but not least, the inclined face by which the bracket is attached to the side of the engine standard needs dealing with, and a trial assembly with the air pump mounted on the engine is an essential first stage. The angled face should be finished so as to ensure that the joint face of the bracket is truly horizontal and at a height of $3\frac{1}{8}$ in. above the base of the standard (i.e. $3\frac{1}{8}$ in. above the machined pads on the bedplate). This dimension is not critical, but will affect the lengths of the rocker arm links. It is unfortunate (and not best engineering practice) that such a bracket should be located on a sloping cast face, but with care a good fit can be achieved. As far as I can remember, I filed the face of the bracket to fit the standard, but if much material is to be removed, it is not difficult to fly-cut the face, particularly if the sides of the bracket are left flat at $\frac{3}{4}$ in. width as suggested above.

Disc Valve & Seating

These parts can be cut from 14 s.w.g. or 2mm hard brass sheet. After drilling the central hole and roughly sawing to size, they are mounted on stepped mandrels (turned from say $\frac{3}{8}$ in. dia. BMS) and secured by nuts for turning their outsides; for the seating, a ring of eight $\frac{5}{64}$ in. holes is drilled at $\frac{3}{8}$ in. PCD. The lower edge of the seating should be given a slight chamfer to ensure that it will bed down completely in the recess in the cylinder. The edges of the holes are carefully deburred with a fine file and the mating surfaces finally lapped.

I start with a flat Indian oilstone (not the one I use for sharpening my woodworking chisels!) and finish up with a fine abrasive on a piece of plate glass. It is now time to make a trial assembly of the cylinder, cover and valve seating, checking with marking blue that the $\frac{1}{4}$ in. dia. projection on the cover contacts the seating firmly when the cover flange is firmly in contact with the cylinder (allowing for thin paper jointing if desired). The valve itself should slide freely on the $\frac{1}{4}$ in. dia. projection on the cover, and it is as well to give both sides of the hole in the valve the slightest trace of a countersink to reduce the possibility of the valve sticking. *To be continued*

What's in Store

New Products Reviewed

Adjustable Swivelling Angle Plates from Model Engineering Services

A recent addition to the Model Engineering Services range of products is an adjustable swivelling angle plate designed for the home constructor. The angle plates consist, in the main, of two substantial iron castings 5 in. square. These, we understand, are supplied ready surface ground. We also understand that the remainder of the finishing work on the plate can be accomplished using a Myford ML7, or similar size lathe, and a drilling machine. The angle plates will swing through 45 deg. in one plane or 25 deg. on the other side of centre, and should prove a useful adjunct to the small milling machine.

The plate is supplied as a kit with the above machining performed ready for finishing. The total cost of the plates, including post and VAT, is £43.64 and is available from Model Engineering Services, 6 Kennet Vale, Brockwell, Chesterfield, Derbyshire S40 4EW. Tel: Chesterfield 79153 or Eckington 433218. Should you wish to call to collect your purchase it is necessary to make an appointment.

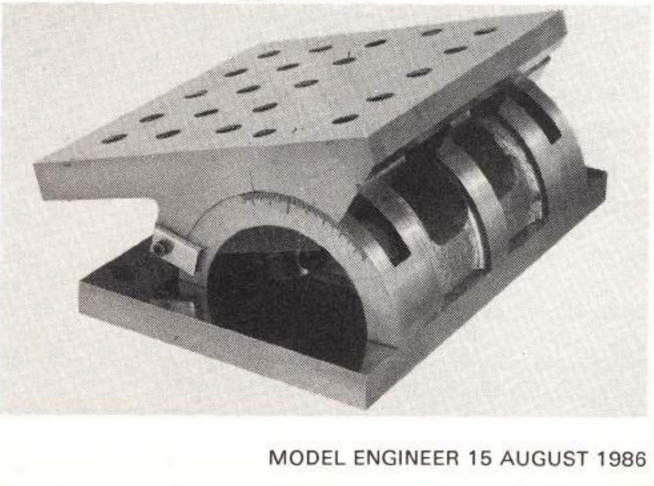

The adjustable angle plate available as a part machined kit from Model Engineering Services. It is shown here in the completed form.

A Marine Triple Expansion Engine

The O. B. Bolton design updated by J. P. Bertinat

Part XIV From Page 206

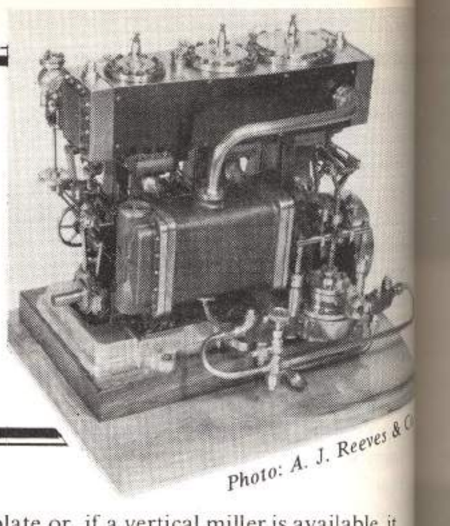
Photo: A. J. Reeves &

Although the combined Water/Air Pump is a relatively small component, due to the complications involved in its manufacture it had to be spread over two instalments. This meant that one item described this time, the rocking lever, was included in the drawings which appeared in Model Engineer *for 15 August, on page 204.*

Water Pump Cylinders

The two cylinders are cast together, so the first job is to saw them apart and perform any necessary cleaning up. Readers who may have the original drawings will notice that I have increased the distance between the bolting face and the centre of the pump bore from $\frac{3}{16}$ in. to $\frac{1}{4}$ in.; with the castings supplied, to make this distance $\frac{3}{16}$ in. to $\frac{1}{4}$ in.; with the castings supplied, to make this distance $\frac{3}{16}$ in. would, in my opinion, have left the lugs unacceptably thin. This change reduces the clearance between the inner pump and the condenser end, but I experienced no trouble here. The first machining operation is to clean up the bolting face; this I did in the lathe, holding the component face outwards in a four jaw chuck. It will be noted that there is a surplus length on the bolting face and I trimmed $\frac{1}{8}$ in. from the *top* end before setting up for machining the cylinder. The casting is now mounted on a face plate/angle plate set up as shown in Fig. 52, which also shows a completed cylinder sitting on the right hand end of the lathe top slide. Note that the outside of the cylinder has been machined as far as the top of the bolting face; this not only improves the appearance but provides a ready means of accurately holding the work in a three jaw chuck at a later stage.

The original drawing called for a $\frac{5}{16}$ in. × 26 t.p.i. thread for the gland, but by careful setting up, I was able to find enough material to increase this to $\frac{3}{8}$ in. × 32 t.p.i. thus providing more metal at the bottom of the thread and giving ample room for packing. While the angle plate set up is in use, the casting may be rotated through 90 deg. with a single clamp placed over the check valve boss and the sides of the bolting face machined to an overall width of 1 in. The casting is now held by the machined cylinder in a three jaw chuck, the lower end faced to length and the bore opened out to $\frac{3}{4}$ in. for a length of 1 in. It is then tapped for a flush fitting or hexagon headed plug. I used the latter and employed a $\frac{9}{32}$ in. × 40 thread since this may be tapped directly into the $\frac{1}{4}$ in. hole. I realise that $\frac{9}{32}$ in. × 40 t.p.i. is not a preferred size these days — mine was acquired when the size was readily available and is often used when making small fittings; I note with interest that the size is now offered by one of our advertisers. Some builders may prefer to omit the chambering of the bore as it provides a potential source of air locks — I have reduced it to a minimum with this in view. For drilling and tapping the $\frac{5}{16}$ in. × 32 t.p.i. hole for the check valve assembly, the casting may be directly mounted on the lathe face plate, with the interposition of a piece of say $\frac{1}{8}$ in. BMS plate to bridge the central hole in the face plate or, if a vertical miller is available, it can be mounted in a machine vice, drilled and tapped and finally skimmed with an end mill. The four holes for the securing screws may now be drilled and spot faced, ready for marking through into the air pump base at a later stage.

The pump glands are simple turning jobs needing no detailed explanation; I have shown a circular slotted nut, but one made from $\frac{1}{2}$ in. A/F hexagon bar may be substituted.

Pump Plungers

These are made up from $\frac{7}{32}$ in. dia. ground stainless steel. Apart from facing to length, they only require shouldering to $\frac{5}{32}$ in. dia. and threading $\frac{5}{32}$ in. × 40 t.p.i. for the retaining nuts which latter are made up from $\frac{1}{4}$ in. A/F hexagon mild steel.

Pump Crosshead

This is turned from $\frac{3}{8}$ in. square BMS. After cutting to length (it is advisable to leave about $\frac{3}{16}$ in. extra on each end for the time being to accommodate

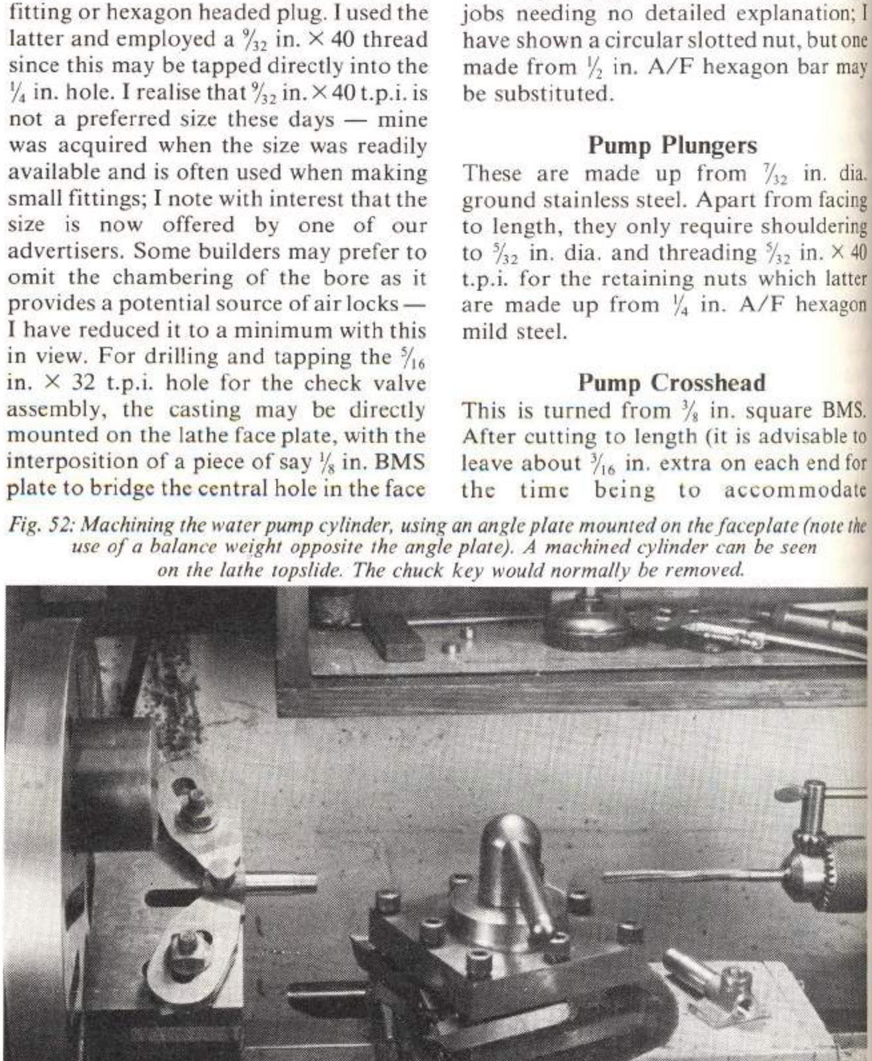
Fig. 52: Machining the water pump cylinder, using an angle plate mounted on the faceplate (note the use of a balance weight opposite the angle plate). A machined cylinder can be seen on the lathe topslide. The chuck key would normally be removed.

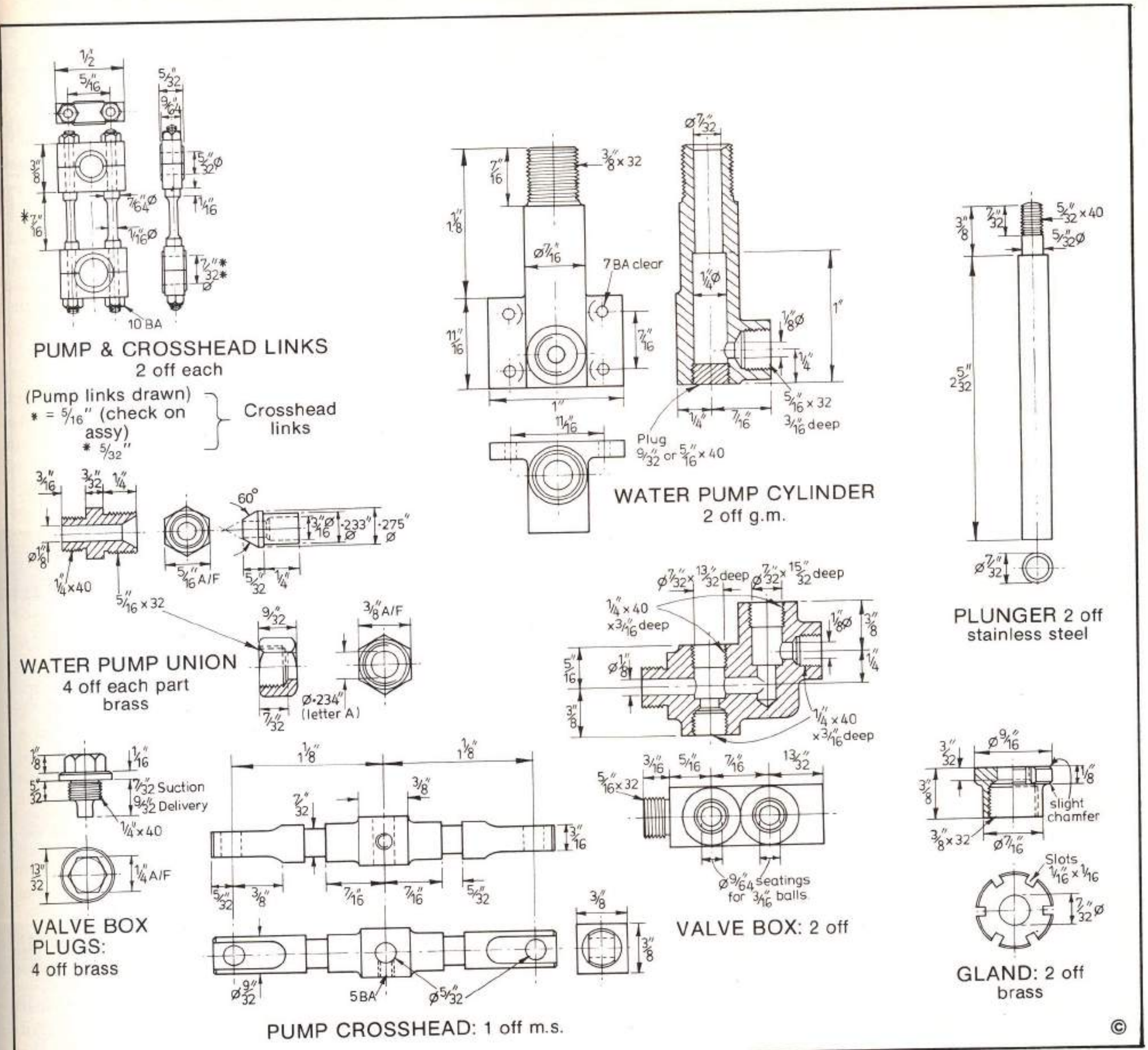

PUMP & CROSSHEAD LINKS
2 off each
(Pump links drawn)
* = 5/16" (check on assy)
* 5/32"
Crosshead links

WATER PUMP CYLINDER
2 off g.m.

PLUNGER 2 off
stainless steel

WATER PUMP UNION
4 off each part
brass

VALVE BOX PLUGS:
4 off brass

VALVE BOX: 2 off

GLAND: 2 off
brass

PUMP CROSSHEAD: 1 off m.s.

supporting centres for use when cutting the grooves or milling the flats), the 5/32 in. hole for the air pump piston rod is drilled, this hole serving as a datum for subsequent measurements. For turning the first end, the work can be held in a four jaw chuck, and then transferred to a three jaw chuck for dealing with the second end; a supporting centre is advisable when using a parting tool to cut the groove for the link bearing. The flats on the ends are milled, using whatever dividing equipment is available, taking care to get them truly at right angles to the central datum hole; a piece of 5/32 in. dia. silver steel through this hole will assist in checking the alignment. Unless these flats are accurately aligned, the water pump plungers will not, when tightened up, be in line with the air pump piston rod and will thus bind.

Before drilling the end holes for the water pump plungers, the water pump cylinders should be temporarily clamped to the air pump in order to check the centre distances. Any minor corrections may be made when marking out the holes in the crosshead; these holes are dimensioned as nominally 5/32 in. but it may be necessary to provide a slight clearance to No. 20 or 4.1mm. The crosshead is located on the air pump piston rod by a 5 BA set screw, and the hole for this may now be drilled and tapped. The cylinders and crosshead may now be assembled and clamped up and, after checking for free operation of the plungers, the mounting holes are spotted through and the fixing holes in the air pump base drilled and tapped.

Valve Boxes, Plugs and Unions

The gunmetal castings for the valve boxes, having flat sides, are fairly easy to hold in a four jaw chuck for the various drilling and tapping operations. In order to increase the available lengths of thread, I have taken advantage of the machining allowance on the castings to lengthen the bosses slightly (particularly those at inlet and discharge). The flat seatings for the ball valves can conveniently be formed by the use of a 7/32 in. end mill, the final seating being accomplished by the time honoured method of tapping the ball, (preferably a carbon steel ball of the same diameter since these are harder than stainless steel balls), on to the seat with a brass or similar punch. It is sometimes suggested that a guide bush be made up for this punch to ensure that the ball is hit truly axially.

The plugs and unions are detailed fully and, to builders who have reached this stage, detail description of methods should not be necessary. I have shown the plugs with a milled hexagon (this may be square if preferred), but plain hexagon bar may be used. The lengths of the pips on the ends of the plugs should be adjusted to give a valve lift of about $^{1}/_{32}$ in. I use a centre drill for producing the seating for the union nipples (Note: the seating should be completely formed during the initial drilling from the solid i.e. before the $^{1}/_{8}$ in. hole is drilled through, otherwise the centre drill is liable to chatter). The union nipples are turned at a single setting, using a 60 deg. form tool to plunge cut the taper, after which the completed nipple is parted off from the stock.

Air Pump Check Valve

The body of this optional item is fabricated by silver soldering. When making such fittings, I file or mill the components to saddle the main body i.e. to a radius of $^{7}/_{32}$ in. in the present case, and secure to the body with small steel screws and washers. Using this method, the silver soldering operation produces a smooth fillet thus simulating a one piece article. If one is not too generous with the silver solder and the screws are very dirty, they do not get soldered in during the operation. I keep a small selection of screws for this purpose, and over the years they have developed a protective coating of scale and rust.

This check valve is intended to supplement and not replace the disc valve at the upper end of the pump cylinder. Without the effective operation of the latter, the vacuum obtainable in the condenser would be greatly reduced on account of the large clearance volume between the top of the pump piston and the external check valve.

Rocking Levers

These two components are cut from $^{1}/_{16}$ in. thick BMS, the two pieces being temporarily held together by small rivets sited in the waste material at the ends. After marking out, the three holes are carefully drilled, finishing with a 3.2mm drill for the 5 BA bolts, Temporary bolts are now put through the two outer holes and the profile of the links completed, after which they are separated and deburred. The four link pivot pins are plain turning jobs from $^{1}/_{4}$ in. dia. BMS; the $^{5}/_{32}$ in. length should be left a few thou. oversize so that the link bearings will operate freely. For the same reason the central pivot pin is dimensioned 0·005 in. full in length to give a working clearance.

Pump and Crosshead Links

These links, connecting the rocker arms to the pump and engine crossheads, each consist of two bearing brasses connected by long stepped studs. The lengths given for these studs are as measured from my engine, but builders are strongly advised to check from the actual job. The clearances at the ends of the air pump cylinder are intentionally small and, to assist to obtaining a good vacuum, the links should be of such a length that the clearance at the top of the pump's stroke is the minimum possible. I have to confess that my connecting studs were made from $^{1}/_{16}$ in. dia. BMS rod, threaded 10 BA for sufficient length for them to be nutted on each side of the bearings; this was intended to be a temporary expedient which permitted adjustment until the correct working length was determined — these 'temporary' studs are still on my engine.

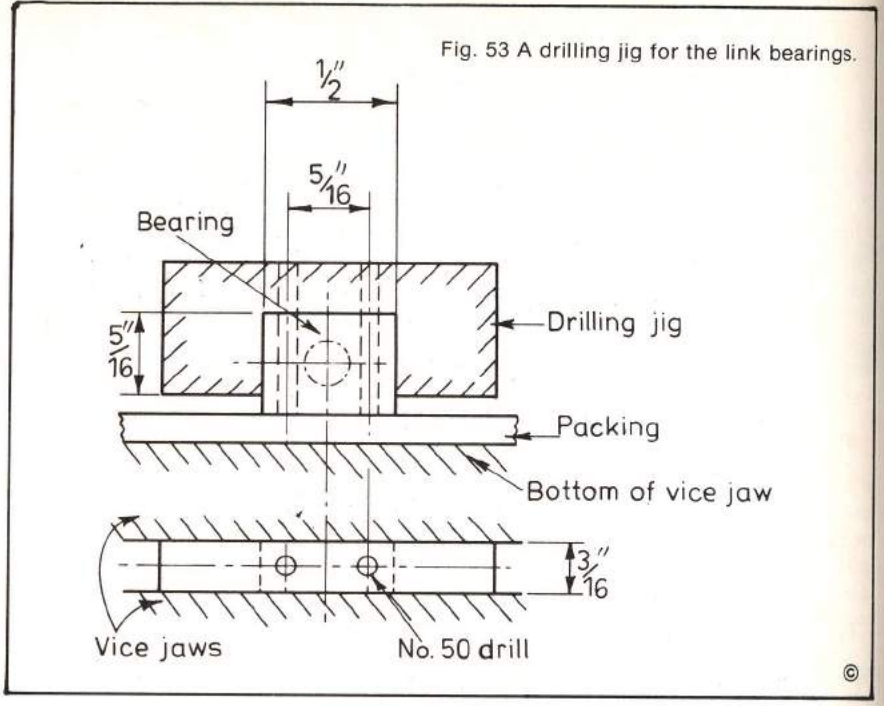

Fig. 53 A drilling jig for the link bearings.

For assembly reasons, the bearing brasses at the lower ends of each pair of links need to be split so that for the sake of uniformity they may all be made in two halves; if so desired, the rocker shaft brasses need not be unsoldered after machining. For the brasses, I suggest that eight lengths of $^{3}/_{16}$ in. square brass or gunmetal bar, each $1^{1}/_{8}$ in. long are prepared and then soldered together in pairs, thus giving four components each sufficient for two brasses. When soldering such components, I usually tin the relevant surfaces and then pinch them together with a pair of home-made tongs while heating them with a small flame; in this way excess solder is squeezed out and a close joint is obtained. If this precaution is not taken, the parts do not always fit correctly when unsoldered and reassembled. After soldering, the pairs of brasses are carefully sawn into single units and the sawn ends are faced off in a four jaw chuck, keeping as accurately as possible to the overall length of $^{1}/_{2}$ in. Since there are eight pieces, it is worth while making up a simple drilling jig for the holes for the 10 BA studs; this jig which is made from $^{3}/_{16}$ in. thick BMS, is depicted in Fig. 53; this explains the need for accuracy in the $^{1}/_{2}$ in. length of the brasses.

For drilling and reaming the bearing holes, it is hardly worth while making up a holding fixture, and a machine vice in the drilling machine should suffice, the bearings being gripped along the $^{1}/_{2}$ in. edge so that the vice pressure reinforces the soldered joint, and the work set square by means of parallels between the work and the base of the vice. Note that the two bearings for the pump crosshead are made $^{7}/_{32}$ in. dia. whereas the remainder are $^{5}/_{32}$ in. diameter. This increase in diameter is to reduce the bending stress in the pump crosshead; theoretically the $^{5}/_{32}$ in. dia. is just strong enough, but in view of the stress raising nature of the design at this point, I decided to play for safety and increase the diameter. The final operation on the bearing brasses is the facing of the sides to an overall width of $^{5}/_{32}$ in., relieved back to $^{9}/_{64}$ in. to provide a suspicion of a boss. This operation is carried out with the brasses mounted on a stub mandrel mounted in a three jaw chuck, temporary bolts being put through the stud holes to reinforce the soldered joints. Do not forget to identify the parts in some way before dismantling the soldered joints; there are sufficient of them to make trial and error assembly a lengthy process!

We shall deal next with the last major item on the engine, viz. the valve gear.

To be continued

A Marine Triple Expansion Engine

The O. B. Bolton design updated by J. P. Bertinat

Part XV From Page 328

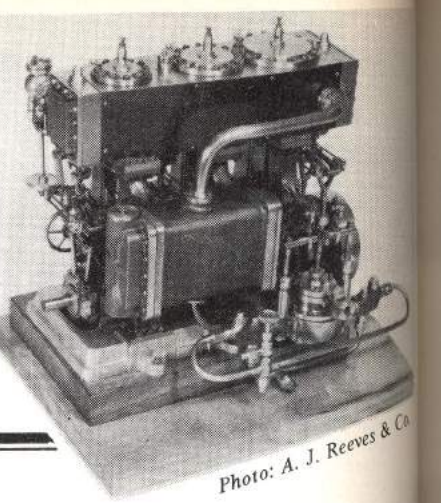
Photo: A. J. Reeves & Co

Valve Gear

The original drawing left many details of the valve gear to be decided by the builder, and my interpretation of the design is shown on the engine's general arrangement and on the accompanying detail drawings. The gear is of conventional Stephenson link pattern, the angular setting of the weighshaft (sometimes in marine practice known as the wyper shaft) being obtained by a crank and connecting link, this crank being controlled by a worm and worm wheel of such a pitch as to be self-locking. The expansion link is of a type common in marine practice and consists of two curved members of rectangular section, the channelled die block (or tumbling block) sliding between them; Fig. 54 shows some details. This construction is in some ways more complex than the conventional launch type links used with smaller engines, but the improved appearance and its closeness to prototype justifies the additional work.

The die block consists of two short channels connected by a shouldered pin, the central section of which provides the bearing for the valve spindle end. In full scale practice this die block is of one-piece construction, the valve spindle end bearing being split to permit assembly, but in the model I have used a one-piece valve spindle end bearing and made one side channel of the die block detachable. The alternative construction, viz. a split valve spindle bearing and a one-piece die block, was considered, but this would have necessitated increasing the length of the expansion link and this is not possible in the present design since any such extension would cause the centre or intermediate pressure link to foul the condenser in certain positions of the valve gear.

In full scale practice, the eccentric rods would be one-piece forgings, but here a built-up construction is employed in which the link bearing and eccentric strap seatings are silver-soldered to the rod and a screwed joint is used between the circular part of the rod and its fork end. In some (but by no means all) engines I have studied — most recently at the Science Museum in London — the forward eccentric has been placed directly in line with the valve rod and all the offset has been placed on the reverse eccentric, but in the present design each eccentric rod has been offset by $\frac{1}{8}$ in., thus making the six eccentric rods identical.

With locomotive link motions the drag links are usually connected to the centre point of the expansion link so that the valve events are similar for both forward and reverse running, but in marine practice the gear is arranged to give optimum valve events when running ahead since astern operation is minimal; for this reason the drag links are attached to the end of the expansion link remote from the weighshaft. This permits the use of long drag links without excessive projection at the side of the engine. With this form of construction, acceptable valve events may be obtained for both ahead and astern running, provided that due attention is given at the design stage to the positioning of the weighshaft and reversing levers.

The point of attachment of the eccentric rods to the expansion links is also worthy of note since it lies on the centre-line of the link and also coincides with the valve rod end in full gear positions. This feature of the design eliminates two possible problems, viz. the loss of valve travel associated with 'locomotive' type links (in which the motion is in effect 'notched up' even in full gear), and the additional angularity component introduced by the offset of the eccentric rod attachment point in the case of the normal 'launch' type link. Now to construction details.

Expansion Links

Each link consists of two carved plates, each $\frac{3}{32}$ in. thick and spaced $\frac{1}{4}$ in. apart. The spacer at one end needs to be detachable to permit insertion of the die block,

Fig. 54 Details of the valve gear for the Triple Expansion Engine.

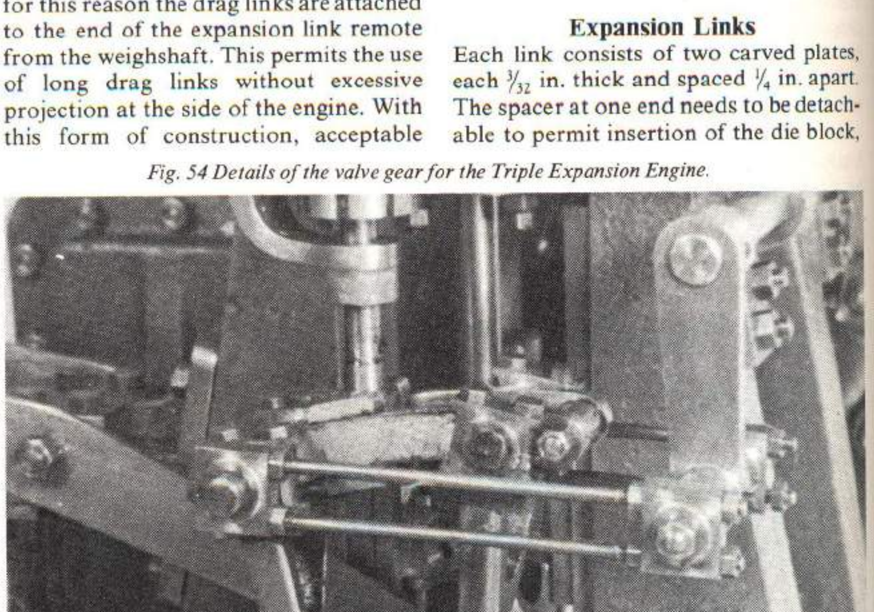

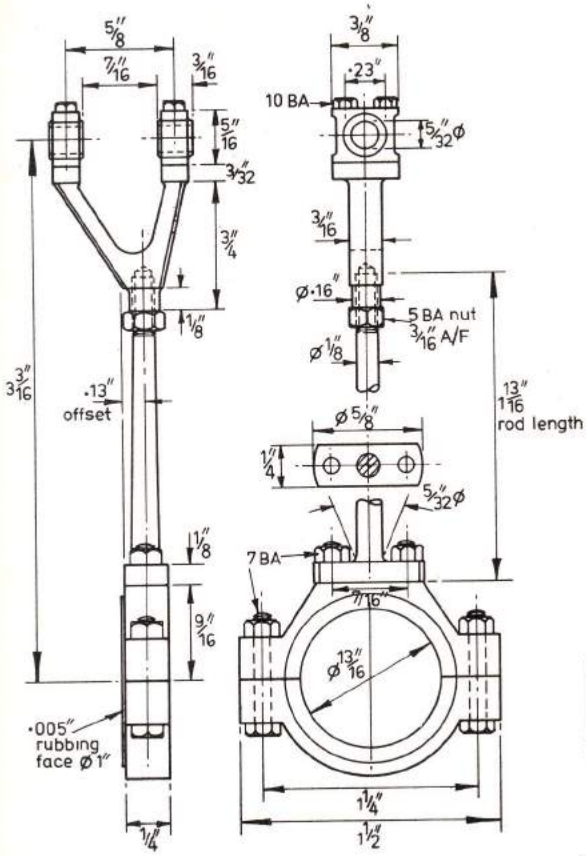

ECCENTRIC STRAP (g.m.) & ROD (m.s.) 6 off

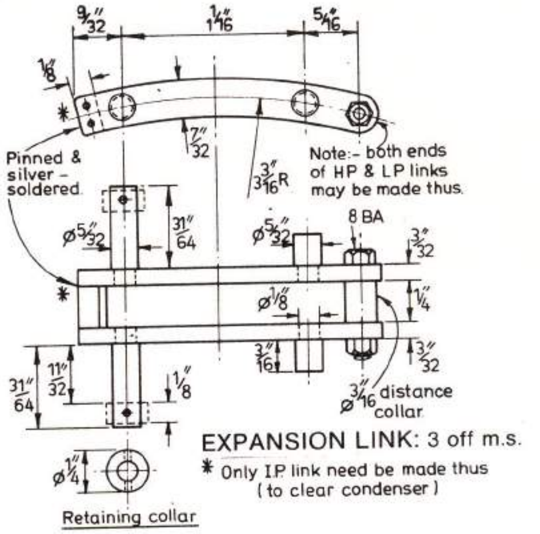

EXPANSION LINK: 3 off m.s.

* Only I.P. link need be made thus (to clear condenser)

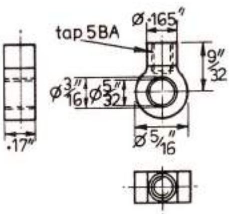

VALVE ROD END: 3 off m.s. (Bush, g.m.)

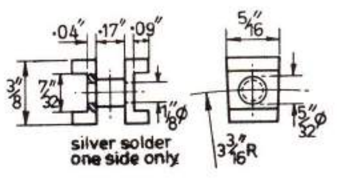

DIE BLOCK: 3 off m.s.

©

and a $\frac{3}{16}$ in. dia. distance collar $\frac{1}{4}$ in. long, held in position by means of an 8 BA nut and bolt, is employed. At the other end, a rectangular block $\frac{1}{8}$ x $\frac{7}{32}$ x $\frac{1}{4}$ in. thick is used, this block being held in position by two small pins prior to being silver-soldered. If desired, the bolt and distance piece construction may be used for both ends of the L.P. and H.P. links, but the construction drawn must be used for the I.P. link in order to clear the condenser.

The initial shaping of the curved edges of the links is carried out by milling, using a fixture as depicted in Fig. 55 bolted to a circular table or to whatever similar equipment is available. The blanks for the links are first roughly sawn to size from $\frac{3}{32}$ in. plate and the two $\frac{1}{8}$ in. holes $1\frac{1}{16}$ in. apart which ultimately receive the eccentric rod pins are drilled; these are the holes by which the blanks are screwed to the fixture for milling. I suggest that the blanks are machined in pairs, suitably identified for future assembly, each pair forming one complete link. Two holes are tapped either 5 BA or $\frac{1}{8}$ in. x 40 t.p.i. in the fixture plate, $1\frac{1}{16}$ in. apart and at a radius of $3\frac{3}{16}$ in. from the centre of rotation. Each pair of blanks is then bolted in turn to the fixture, interposing washers to raise the work from the fixture in order to provide clearance for the end mill which is then used to profile both edges of the links.

The pivot pins for the eccentric rods and drag links are silver-soldered into the links at the same heating as when dealing with the end distance piece. Note that the longer ($\frac{31}{64}$ in.) pins are those which also take the drag links, and they must be at the same end of the link as the fixed joint. While silver-soldering, a temporary bolt and distance piece are used at the open end to hold the parts in position, Using Easy-flo and a small propane torch, I get little scaling during the silver-soldering process, and if care is taken not to apply too much silver solder, little cleaning is necessary; if there should be some excess solder to clean off the pins, a hollow end mill having a $\frac{5}{32}$ in. clearing (No. 22 drill) bore may be made up for this purpose.

Die Blocks

The channels for the die blocks were milled, using the same fixture as for the links. Sufficient material to form the six channels plus an allowance for holding (say 3 in. overall) is held by its ends to the fixture using deeply counterbored and countersunk screws so that their heads are not removed when cutting the central groove (see Fig. 56).

It is advisable to omit any spacing washers underneath the work in this instance, in order to secure greater rigidity; some builders may be inclined to make the blank slightly longer and add a third central holding down screw. At this setting, the $\frac{7}{32}$ in. wide groove may be milled, the outer edges profiled, and the $\frac{1}{8}$ in. dia. holes for the shouldered pins drilled. During the profile milling, the end mill will cut slightly into the fixture plate, but this is of little consequence since its services can be dispensed with when the die blocks are completed.

An alternative and possibly more rigid way of securing the blank to the fixture plate will be by soft-soldering, but then great care would need to be taken to remove every trace of soft solder by virtually removing a thin layer of steel before attempting to silver-solder the pivot pins into place. If using this method, the holes for the shouldered pins should initially be drilled undersize and opened out during the cleaning up stage to ensure that they are not contaminated by traces of solder. Some readers may suggest the use of Loctite for the holding down process, but since I have not tried this method of holding down components for milling, I will not positively recommend its use here.

After milling and drilling the die blocks, they are separated and their ends cleaned up. In my case the end-milling and drilling was carried out using the vertical head on the milling machine and the subsequent separation of the blanks were performed at the same setting of the work by means of a thin slitting saw, mounted on a stub arbor in the horizontal spindle of the milling machine. In this way, provided that the pitch of the holes drilled in the blank was equal to 5/16 in. plus the cutter thickness, the parts may be practically finished straight from the machine. It is important to note that if the blank is held by screws only, complete separation is not possible and the final 1/32 in., say, has to be subsequently cut with a junior hacksaw, but if soldered to the fixture plate they may be completely separated in this way.

Finally the pin connecting the two sections of each die block is silver-soldered into one side of the assembly only. Care should be taken to get the other side a good push fit in the side of the block.

Valve Rod Ends

These are conveniently made from 3/8 x 3/16 in. b.m.s. bar. The parts will be easier to hold accurately if as much work as possible is carried out before separating from the bar, e.g. the 3/16 in. dia. hole for the bush can be drilled and reamed, and the bar then transferred to a 4-jaw chuck for drilling and tapping the valve rod hole (there is no need to drill and tap a blind hole here since the gunmetal bush will subsequently cover the hole), and turning to 0.165 in. dia. The work is then separated from the bar and mounted on a 3/16 in. dia. stub mandrel for facing to a thickness of 0.17 in. and for milling the 5/16 in. dia. profile. Finally the gunmetal bushes are made and pressed home.

Stages in Making the Eccentric Rods

These comprise three separate parts, viz. the fork end, the rod and the bearing brasses. The fork ends are cut from 3/16 in. thick b.m.s. plate and have small platforms or palms silver-soldered to them to hold the link bearings. The sequence of operations I used for making these parts is set out below and also in the accompanying diagram Fig. 57 i to v.

(i) Prepare 3/4 in. length of 3/4 x 3/16 in. b.m.s. — 6 off.

(ii) Form boss and tap 5 BA, mark out and drill 3/72 in. dia. hole to form base of fork, tap 10 BA x 0.10 in. deep for temporary screws to secure bearing supports.

(iii) Saw and file outside to shape and round outer edges; saw out centre to meet hole radius.

(iv) Make up bearing support pads — 12 off.

(v) Make up temporary 10 BA screws for holding bearing supports in position while silver-soldering (no special heads required — tighten with pliers). These screws may get silver-soldered in place, in which case the heads are sawn off.

The lower portion of the rods were again built up by silver-soldering, and the dimensions of the rod before final machining are shown in Fig. 58. This component is rather small for normal between-centres turning on a model engineer's lathe, and I made up a special centre, to be held in a 3-jaw chuck and incorporating its own mini-carrier which engaged in one of the holes existing in the palm of the rod. This special centre-cum-carrier is illustrated in the collection of tools in Fig. 50, and in use in Fig. 59.

The link bearings, of which 12 are required, should in theory be split, but this is not essential for assembly and I did not do so. They are parted off from 3/8 in. x 5/16 in. bronze bar (I use a shaper for

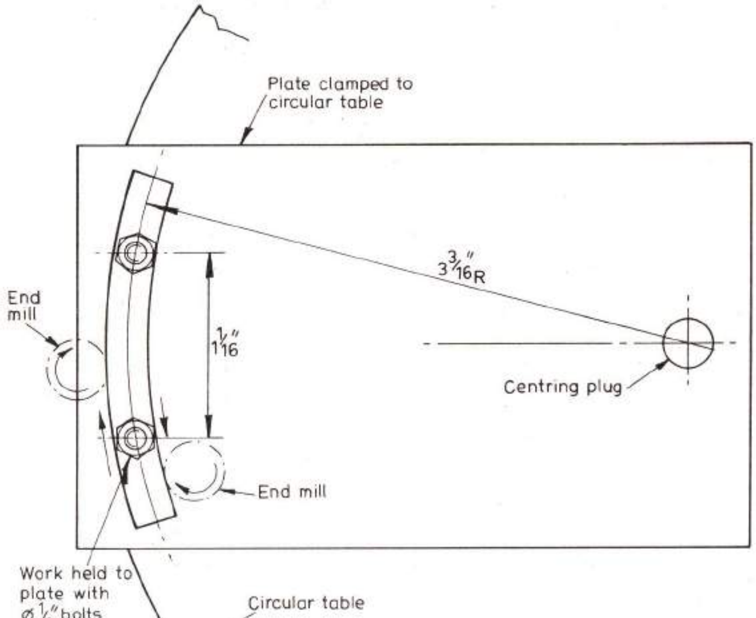

MILLING EXPANSION LINKS
Fig. 55

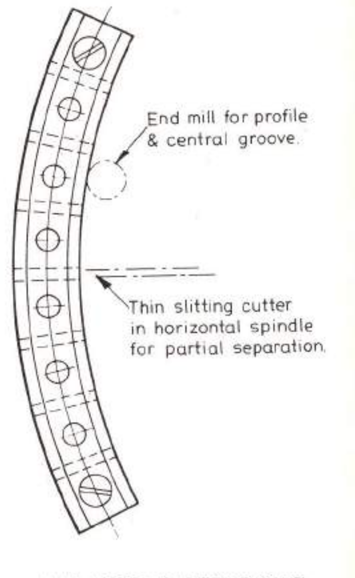

MILLING DIEBLOCKS
Fig. 56

©

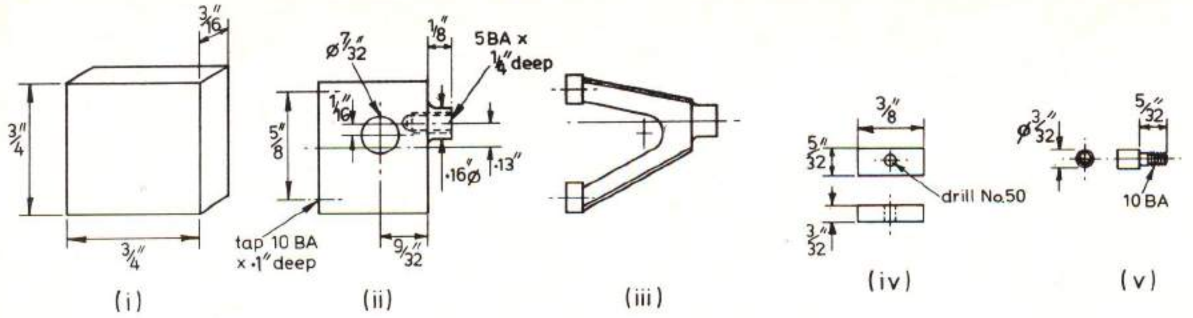

ECCENTRIC ROD & FORKS
Fig. 57

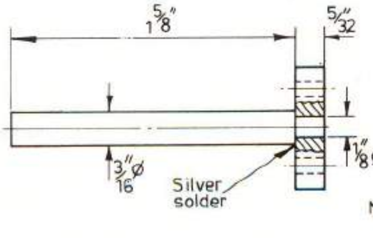

ECCENTRIC ROD BLANK
Fig. 58

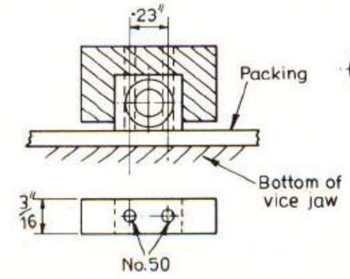

DRILLING JIG FOR BEARINGS
Fig. 60

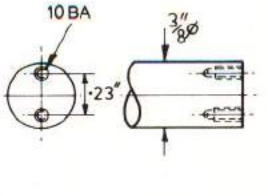

FIXTURE FOR TURNING BEARING ENDS
Fig. 61

©

Fig. 59: The special centre-cum-carrier shown set up for machining the eccentric rods.

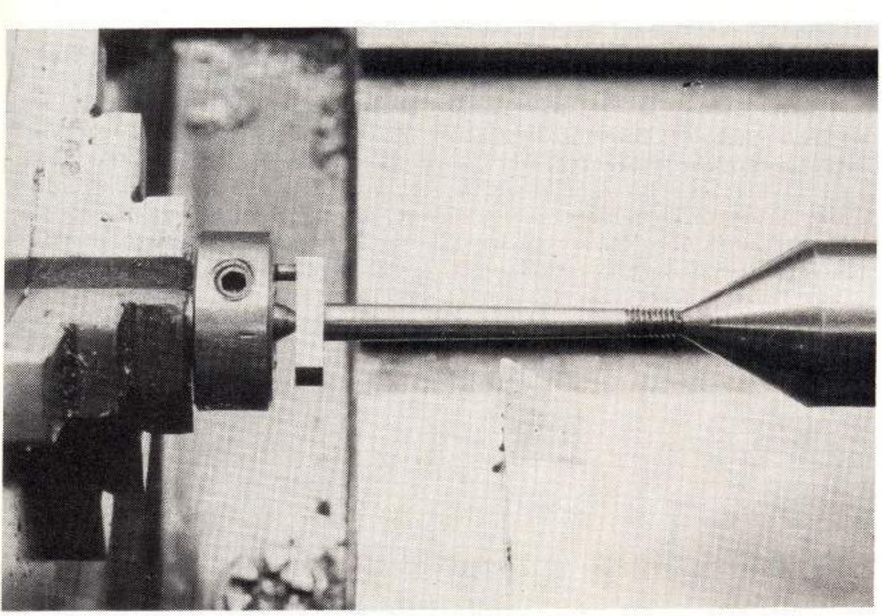

preparing these non-standard sections). The bar is held centrally in a 4-jaw chuck and progressively drilled and reamed 5/32 in. as the bearings are parted off; they are then mounted in turn on a 5/32 in. stub mandrel for finish machining. For drilling the bolt holes in the bearings, a drilling jig similar to that used for the pump link bearings is used, and this is shown in Fig. 60; this jig will also be used for the drag link bearings. The slight 'waist' turned on the sides of the pump link bearings is not entirely ornamental, but is necessary to provide clearance for the nuts at the ends of the links and is produced by a simple turning operation, the bearings being bolted to a drilled mandrel for this purpose. Fig. 61 shows this mandrel. To assemble the bearings with the fork ends, a pair of bearings are mounted on a short piece of 5/32 in. dia. silver steel to preserve alignment and the bearings carefully clamped in position on the fork ends for spotting the 10 BA tapped holes in the forks. *To be cont'd.*

Readers' Work

The following information and advice supplements the notice which appears on the "Contents" page. Readers who submit material which they would like considered for publication are asked to type it if possible (or have it typed) and use one side of the paper with double spacing for the manuscript. A margin of at least one inch on each edge of the page is needed for editing purposes. Manuscripts submitted in this form do not require the additional work of re-typing in this office, which is frequently under pressure. Also, the decision whether to publish or not can be influenced by the amount of office work needed to be done to prepare material for the printer! Line drawings accompanying a manuscript should be clear and unambiguous, as they often have to be re-drawn for our printer to process properly. Photographs, if submitted, should be good glossy black and white prints with good gradation. Anywhere between Enprint to 7 in. by 5 in. size photographs are suitable; it is unnecessary to submit larger ones than this although, of course, they can be used.

A stamped addressed envelope should accompany unsolicited work for its return if it is not accepted. It is assumed that work submitted has not been concurrently sent elsewhere.

A Marine Triple Expansion Engine

The O. B. Bolton design updated by J. P. Bertinat

Part XVI From Page 433

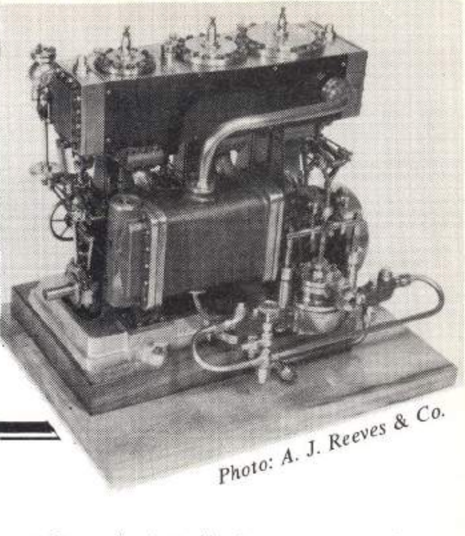

Photo: A. J. Reeves & Co.

This part of the series brings us to the making and erection of the final mechanical components of the engine. The drawings for the eccentric straps and rods appeared last time.

A Small Correction

A reader has brought to my attention an inconsistency which has crept into my drawings. The drawing in question appeared in *Model Engineer* 18 April Page 449. The clearance slots in the bedplate are, as dimensioned, slightly too narrow to accept the eccentric sheaves which are wider than on the original drawing. The problem is readily overcome by filing out the slots in the bedplate to a width of $\frac{5}{8}$ in. instead of the $\frac{9}{16}$ in. width as given. This I did on my engine and regret that I failed to record the dimension correctly. (The plans for this section of the engine have been altered to include the new dimension — Ed.).

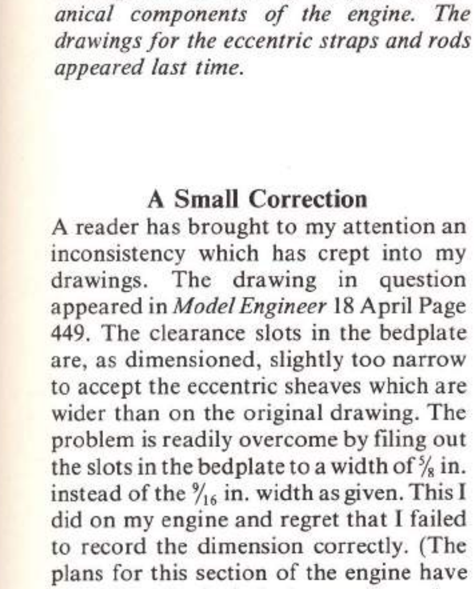

SLITTING ECCENTRIC STRAPS
Fig. 62

©

Eccentric Straps

These are of conventional split gunmetal construction of a type familiar to locomotive enthusiasts; as mentioned at an earlier stage when dealing with the eccentric sheaves as crankshaft accessories, the inner faces of the straps carry an annular projection of 0.005 in. to localise the rubbing between adjacent sheaves. The original drawing called for straps $\frac{5}{32}$ in. wide, but there was sufficient material on my castings for the 0.04 in. extra I have called for.

When making such straps, I normally drill and spotface the bolt holes first and then separate the two halves of the strap with a thin slitting saw in the milling machine, thus obviating the necessity of cleaning up the joint. For this operation, the work is clamped to a fixture composed of two angle plates as shown in Fig. 62, the slitting cutter being mounted on a stub arbor in the horizontal spindle. This operation could also be carried out on the lathe, using a single angle plate and a vertical slide. After removing any burrs etc., the two sections of the strap are bolted together and transferred to a 4-jaw chuck for boring and facing one side, the second side being dealt with by mounting the strap on a $1\frac{3}{16}$ in. dia. stub mandrel. The 0.005 in. thick rubbing annulus is formed on what will be the inside face of the sheave, i.e. on that face which will contact the adjoining eccentric.

When the straps and rods are assembled it is essential that, in any one pair, both rods are of exactly the same length. Some adjustment is possible at the screwed joint between the rod and fork, but there is a possibility of a residual error of half a thread pitch (0.012 in.); this error may be corrected by trimming either the faces of the top bearings or the eccentric straps or, if preferred, by a shim between the rod and strap. Fig. 63 shows the eccentric and link assembly.

Drag Links

These are of similar construction to the pump lever links, but their bearing brasses are the same size as those for the eccentric rods but $\frac{1}{32}$ in. narrower. I suggest that they are initially made $\frac{3}{16}$ in. thick so that the drilling jig of Fig. 60 may be used, and the bearings faced to $\frac{5}{32}$ in. thick after drilling. Again the bearing can be assembled without the complication of splitting. Note that the rods are screwed into the bearings at one end and clamped between two nuts at the other; this gives some room for adjustment if found necessary. The $\frac{1}{16}$ in. dia. rods specified are theoretically 0.005 in. too small to accept a full 10 BA thread, but this is acceptable; it will be found that the cutting of the threads rolls up the metal slightly so that the threads will not necessarily be 0.005 in. down.

Reversing Levers

These are best machined from the solid and can be cut from $\frac{3}{8}$ in. x $\frac{1}{2}$ in. bar. The two shaft holes are drilled and reamed ($\frac{7}{32}$ in. dia. for the weighshaft, and $\frac{3}{16}$ in. dia. for the drag link pivot pin) and as much as possible of the waste material is then sawn away. The bosses are formed by mounting the work on stub mandrels held in a 3-jaw chuck and, with care, much of the flat sides of the lever may be formed in this way. The work is discouraged from rotating on its mandrel by a temporary pin or bolt placed in the other hole and engaging on the side of one of the chuck jaws; final finishing will be by careful filing. The $\frac{3}{16}$ in. dia. spindle, on which are formed the drag link bearings, is located in the lower hole of the lever by means of a $\frac{1}{16}$ in. dia. pin and, for this purpose, a spring roll pin or tension pin may be used. For attachment of the three levers to the weighshaft, I have shown two cross pins in each, and I recommend solid $\frac{1}{16}$ in. dia. taper pins for this purpose; the light duty roll pins are liable to develop backlash when subjected to the appreciable loads which occur at certain positions of the reversing link.

Weighshaft Operating Lever

This lever, by which the angular position

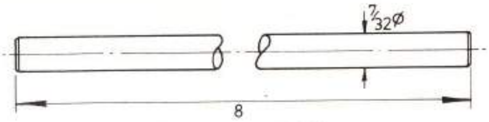

WEIGHSHAFT:
1 off m.s.

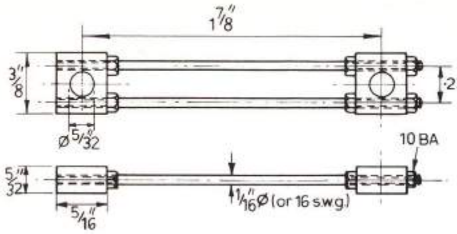

DRAG LINK:
6 off Bearing m:
Rods; m.s.

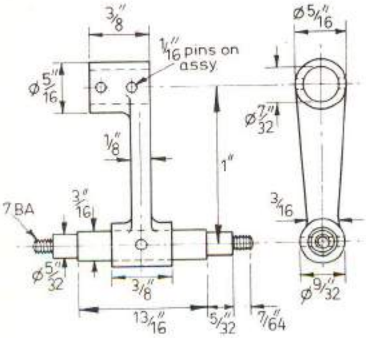

REVERSING LEVER:
3 off m.s.

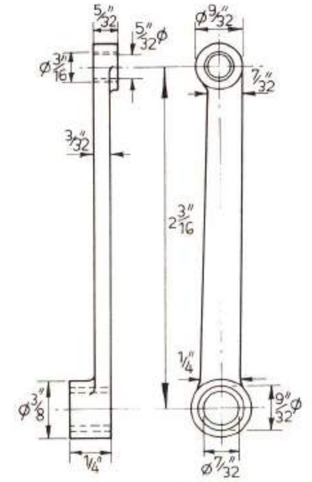

REVERSE GEAR
OPERATING LINK:
1 off m.s. — bushes g.m.

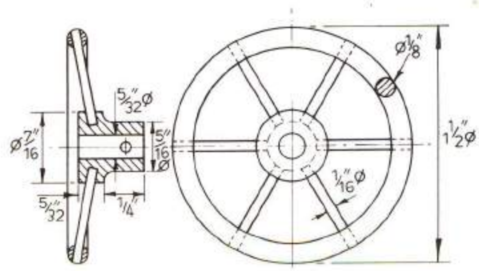

REVERSING
HANDWHEEL:
1 off m.s.

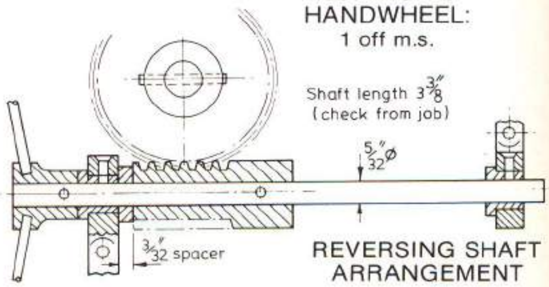

REVERSING SHAFT
ARRANGEMENT

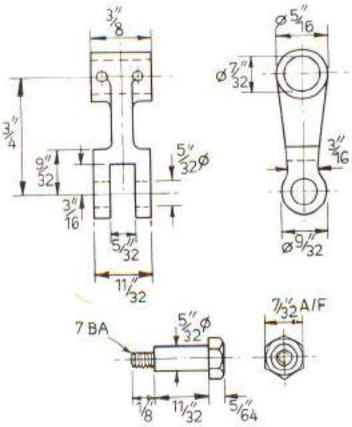

WEIGHSHAFT OPERATING
LEVER & PIN: 1 off m.s.

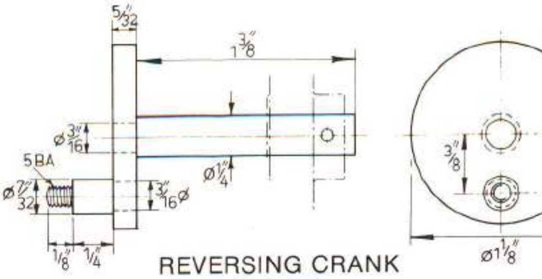

REVERSING CRANK
1 off m.s.

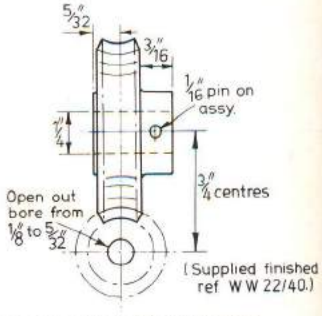

WORM & WORMWHEEL

of the weighshaft is controlled, is again a 'carve from the solid' exercise and similar methods to those used for the reversing levers may be used. The $\frac{5}{32}$ in. dia. pivot pin is turned from $\frac{7}{32}$ in. A/F hexagon b.m.s. (or nearest available). The angular positioning of the various levers on the weighshaft calls for some care; the three reversing levers are, of course, all in alignment, and once their axial position along the weighshaft has been established they may be pinned, but the weighshaft operating lever is best left until all parts of the gear can be assembled. When setting such levers on a shaft, I usually introduce a small (6 or 8 BA) socket grubscrew in addition to the taper pins; this is located on the underside of the lever where it will not be seen, and serves to hold the lever in place once the correct setting has been determined, and while the taper pins are being fitted.

The Operating Gear

We now come to the operating system for the valve gear with its worm drive, and this is shown in Fig. 64. When I made up my engine, the gears were not immediately available and so I made my own. The worm was a simple screw-cutting job (Acme thread) with a spare made up and converted into a hob for finishing the teeth of the bronze worm wheel. The teeth of the latter were individually gashed out by means of a small form cutter; both the cutter and the hob were illustrated in Fig. 50 which appeared earlier in the series. Since appropriate gears are now available from A. J. Reeves, full tooth dimensions are not given in the present drawings. Apart from drilling the cross pin holes, the only modification required to the 'Muffett' gears now supplied is the opening of the bore of the worm from $\frac{1}{8}$ in. to $\frac{5}{32}$ in.

Reversing Crank

This crank, which locates in the tubular bearing already fitted to standard No. 6, may be of simple built-up construction. I made the disc from $^3/_{16}$ in. material and cleaned it down to the finished thickness after silver-soldering it to the shaft. The crankpin is a press fit in the disc and provision is made for a 5BA nut and washer to retain the valve gear operating link.

Valve Gear Operating Link

This is made from $^3/_{16}$ in. x $^3/_8$ in. b.m.s. bar and is fitted with gunmetal bushes at either end. Note that the shank of the rod is slightly offset at its top end, in order to avoid fouling the base of the fork in the weighshaft operating lever to which it is attached.

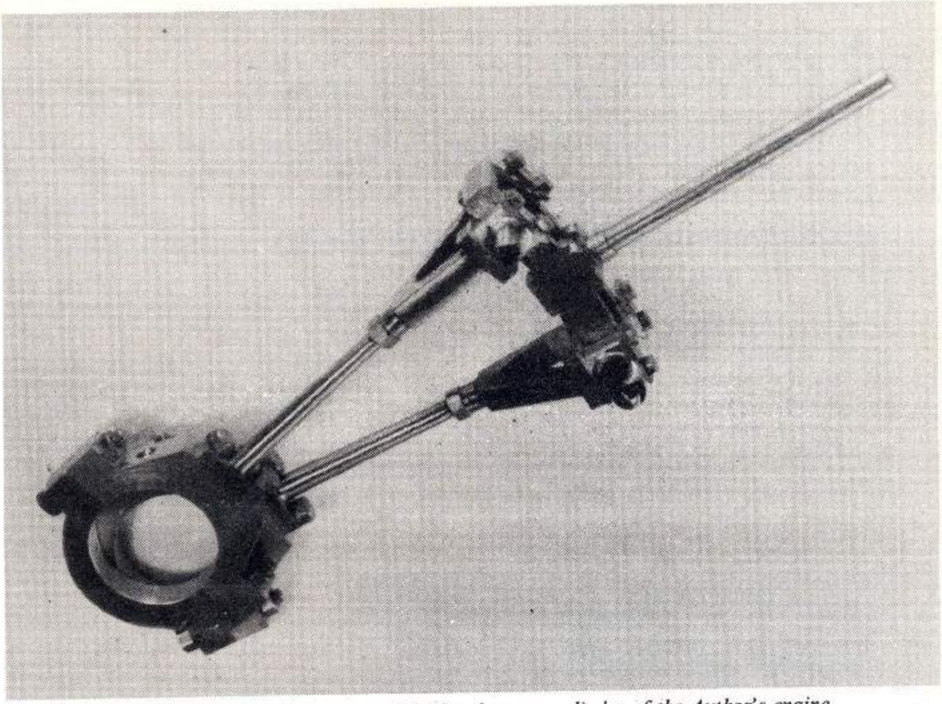

Fig. 63: The eccentrics and link assembly fitted to one cylinder of the Author's engine.

Handwheel

The fabrication of this component involved some trial and error, and the handwheel shown in the photograph is the result of my second attempt. The rim of the handwheel is made up from $^1/_8$ in. dia. b.m.s. bent round a circular bar, the joint being silver-soldered. For the bending operation it is necessary to start with a length of material considerably greater than is required for the circle, so that about $1^1/_2$ turns of a closely coiled helix are first formed; in this way any irregularities at the start of the bend are in the pieces to be discarded. The joint needs to be clamped for the silver-soldering operation, otherwise it is liable to open during the heating. After turning the boss from $^7/_{16}$ in. dia. b.m.s., but before separating it from the bar, it was transferred to the dividing head on the miller, the vertical head of the latter being set over 10 deg., and the six radial holes drilled $^1/_{16}$ in. dia. for the spokes.

At the first attempt I fitted the spokes to the hub and wedged them neatly into the rim in the hope of silver-soldering the lot but, alas, everything moved on heating and the result was far from pleasing. In my second and successful attempt, the completed rim was held in a chuck on a dividing head and the six $^1/_{16}$ in. spoke holes were drilled through the rim as shown in the drawing. After tinning a length of spoke material the spokes were again fitted, this time each protruded slightly through its hole in the rim. With the holes in both rim and hub accurately indexed and angled, the wheel went together accurately, whereupon the assembly was sweated together with soft solder and the ends of the spokes cleaned off level with the rim.

Fig. 64: A detail photograph of the operating gear showing the handwheel, the worm and wormwheel assembly and the mounting brackets.

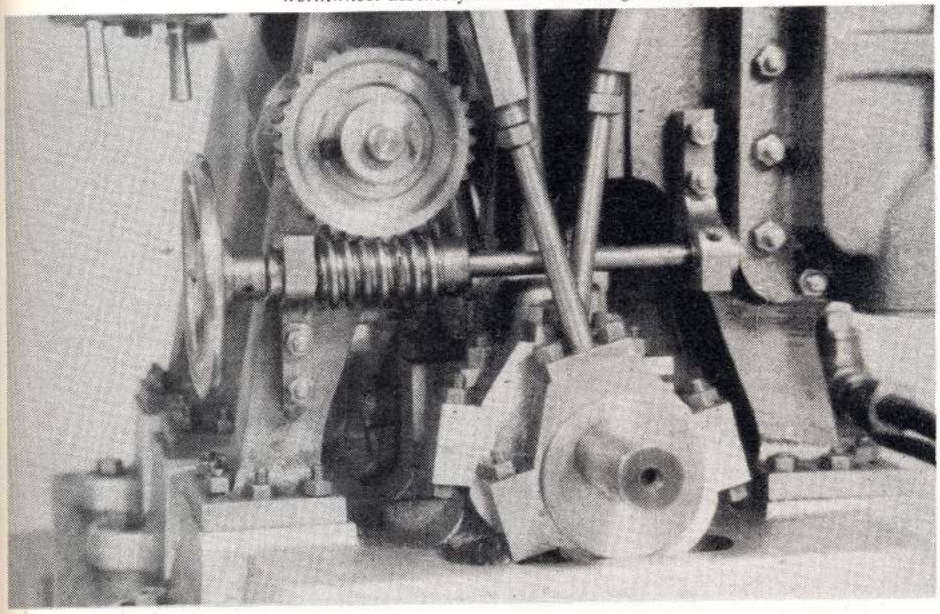

Erection of Operating Gear

The shaft on which the handwheel and worm are mounted is a plain length of $^5/_{32}$ in. dia. b.m.s. to which the handwheel and worm are attached by $^1/_{16}$ in. dia. cross pins. In the sub-assembly drawing, a $^3/_{32}$ in. thick spacing washer is indicated to bring the centre of the worm in line with the worm wheel axis; the actual necessary thickness of this washer should be checked by trial on assembly. As mentioned earlier when dealing with the engine standards, the positioning of the worm shaft bearings on the standards should be such that the gears operate without backlash. Now that all parts of the gear are assembled, the correct angular positioning of the weighshaft operating lever can be established; this should be such that full gear in each direction can be obtained. It should be noted that the radius of the reversing crank is such that if the handwheel is operated to an extent which would take the reversing crank beyond its dead centre position, the gear will not be strained.

This about completes the description of the engine, and it only remains to deal with the main steam stop valve (a casting for which comes with the kit), cylinder relief and drain valves and to discuss pipework and lubrication arrangements.

To be continued

A Marine Triple Expansion Engine

The O. B. Bolton design updated

by J. P. Bertinat

Part XVII (Conclusion) From Page 549

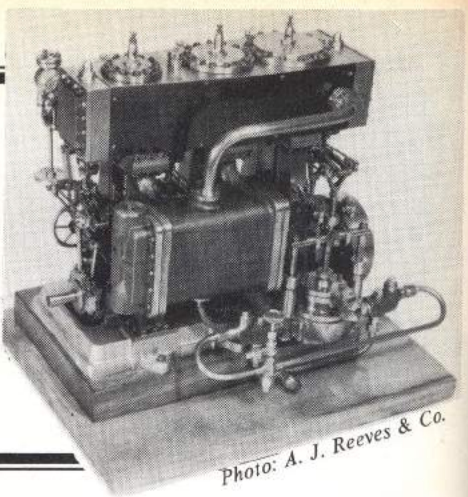

Photo: A. J. Reeves & Co.

I am sure that builders will join with me in thanking the Author for ironing out the bugs in this design – Ed.

Main Steam Stop Valve

As mentioned at the commencement of the series, this valve has been transferred from the high pressure steam chest cover to a more normal position on the side of the valve chest. This change has grouped the reversing wheel and the steam valve conveniently, but required the introduction of a distance piece in order to bring the steam valve clear of the reversing wheel; this distance piece conveniently takes the form of a 'T' piece, the side branch of which is threaded to accept a check valve for a mechanical lubricator.

The body of the valve is a substantial gunmetal casting representative of the 'globe' body of full scale practice; this body would, in full scale, have the various passages cored so as to produce minimum resistance to flow, but in our model we shall have to be content with drilled passages. In pre-war days, Stuart Turner made wheel valves with cored passages (my 1940-41 Stuart Catalogue confirms this), but alas such luxuries are no longer financially viable. The valve also incorporates another feature common to full scale valves in the larger sizes, namely a spindle with a thread external to the gland and working in a nut (Part 6) which is attached to the body by a pair of columns (5). The finished valve is shown in Fig. 65, together with the 'T' piece and the oil pump check valve, and the accompanying drawings show the assembly and details.

The spherical body of the casting is first cleaned up with files and is then set up in a 4-jaw chuck with the longitudinal axis running true. The accuracy of this setting is best checked by reference to the 'necks' on the casting between the end flanges and the spherical body since there is little spare metal here, particularly at the gland end. At this setting, the main drillings for the steam way, valve seating and gland may be made and the $\frac{5}{16}$ in. x 40 t.p.i. thread for the latter tapped; the $\frac{3}{8}$ in. dia. x $\frac{1}{8}$ in. deep counterbore is to allow a greater thickness of metal in the lower part of the gland (Part 3). The top flange is now machined by mounting the casting on a $\frac{5}{16}$ in. x 40 t.p.i. stub mandrel; the side flange, with its $\frac{5}{16}$ in. x 26 t.p.i. thread, is subsequently machined by holding the casting crosswise in a 4-jaw chuck, small pads being used to prevent damage to the already turned end flanges.

The upper steam pipe flange (Part 2) is turned from $\frac{3}{4}$ in. dia. brass bar and is either threaded $\frac{1}{4}$ in. x 40 t.p.i. for the steam pipe or drilled $\frac{1}{4}$ in. if it is intended to silver solder the pipe in position. After indexing and drilling the three 10BA holes, the flange is parted off from the bar and offered up to the body for locating

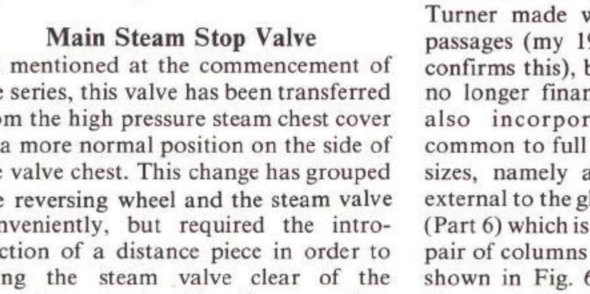

STOP VALVE TEE PIECE

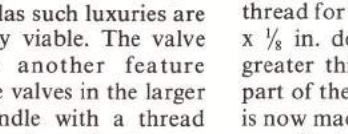

STOP VALVE TEE PIECE

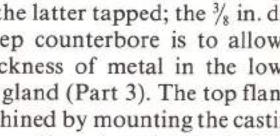

SUCTION TEE & UNION

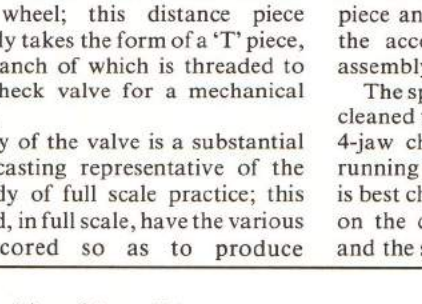

CYLINDER RELIEF VALVE (Upper):
3 off

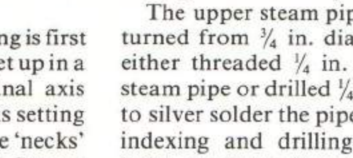

CYLINDER RELIEF VALVE (Lower):
2 off

©

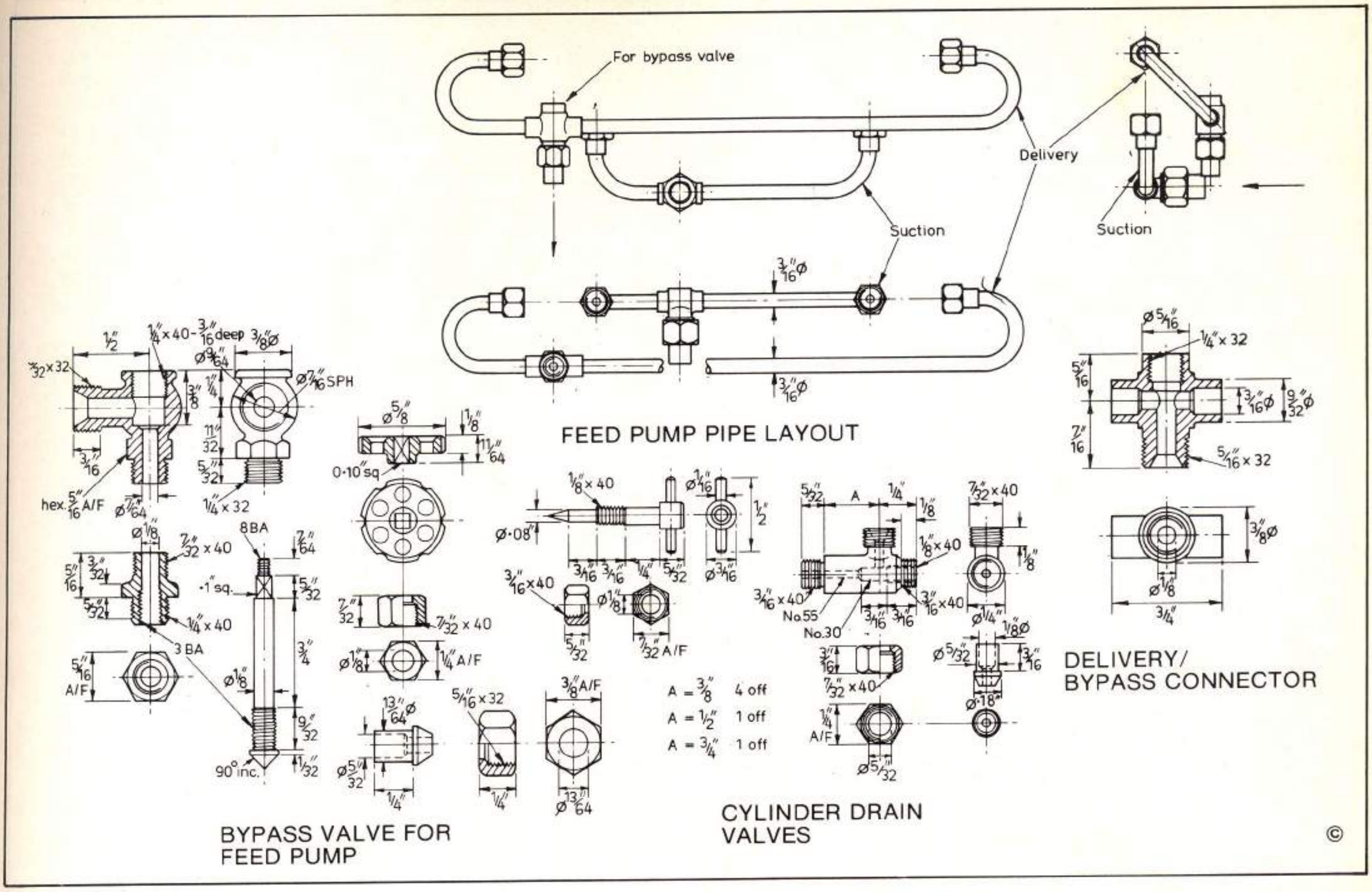

the 10BA tapped holes in the latter. I prefer to use studs and nuts for securing the flange, as it avoids wear on soft gunmetal threads, but this is not always possible; some pipe layouts require the use of ordinary bolts so that the parts may be slid into position.

The spindle guide (3) which is turned from $^{3}/_{4}$ in. dia. brass or gunmetal bar, contains the recess for the gland; the two 7BA holes in its flange receive the pillars (5), while the two 10 BA holes are for the gland studs. The guide is scrawled into the valve body using a $^{5}/_{16}$ in. x 40 t.p.i. thread, the fine thread being employed to obtain maximum metal thickness within the restricted space. In the absence of castings, the gland (4) and the bridge (6), the latter carrying the thread in which the spindle operates, can both be made from scraps of gunmetal or brass (preferably the former). The two pillars (5) which support the bridge are turned from $^{5}/_{32}$ in. dia. b.m.s. or stainless steel. I have shown the central section of these pillars reduced from $^{5}/_{32}$in. to $^{1}/_{8}$ in. dia., and while this wasting improves the appearance, it creates a slight manufacturing problem when threading the second end. It is suggested that the pillars are turned 7BA end outwards and, by withdrawing the bar from the chuck in stages, a pillar may be completed on the bar with the exception of the 8BA thread. This last operation may be performed with the work held in a 7BA threaded collet, the 8BA dia. (0.087 in.) having been turned before separating from the bar.

The valve spindle (7) is turned from $^{7}/_{32}$ in. dia. stainless steel and, due to its slender nature, is best turned in sections, withdrawing the bar from the chuck as necessary and supporting the free end at the tailstock. As an alternative to centre drilling components of such small diameter, I often provide the tailstock support by means of a brass bush

Fig. 65: The main steam stop valve as made by the author and fitted to this engine.

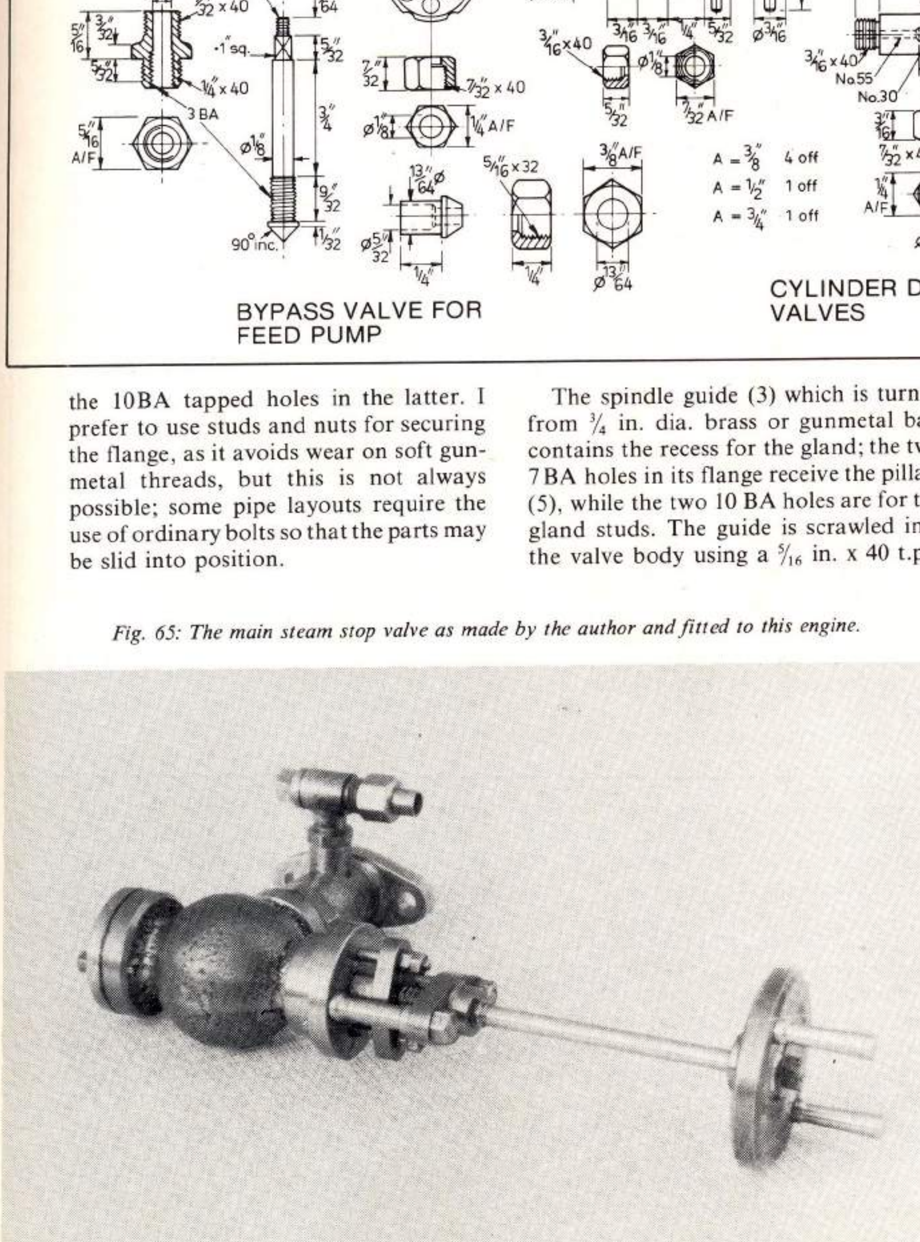

gripped in the tailstock chuck. The apparently odd diameter of the lower end of the spindle (0.115 in.) is the maximum advisable to clear the core diameter of the 5/32 in. BSW thread. The square section to which the hand wheel is fitted is either filed or milled — I find that a vertical miller having a dividing head with chuck is a boon for such operations. I have shown a handwheel made from 1 in. dia. brass bar and fitted with two tapered stainless handles; this detail may, of course, be varied to suit the builder's taste.

The spacer cum 'T' piece which is interposed between the stop valve and the steam inlet flange is turned from 1/2 in. dia. brass bar and has a boss to accept a check valve for the oil pump silver-soldered to its side. Some builders may query the use of a 5/16 in. x 26 t.p.i. thread at one end of the fitting and a 5/16 in. x 32 t.p.i. thread at the other; this arose out of my desire not to alter anything on the original drawing without good reason, and hence I retained the 5/16 in. x 26 t.p.i. thread for the stop valve. The finer thread was, however, preferred to screw into the inlet flange, but obviously either thread could be used at both ends. When making up such fittings, a well fitting (slightly tight) thread is highly desirable and I often screwcut these since I have found that some commercial dies persist in producing a slack thread, even when adjusted to the full extent permitted by the die-holder.

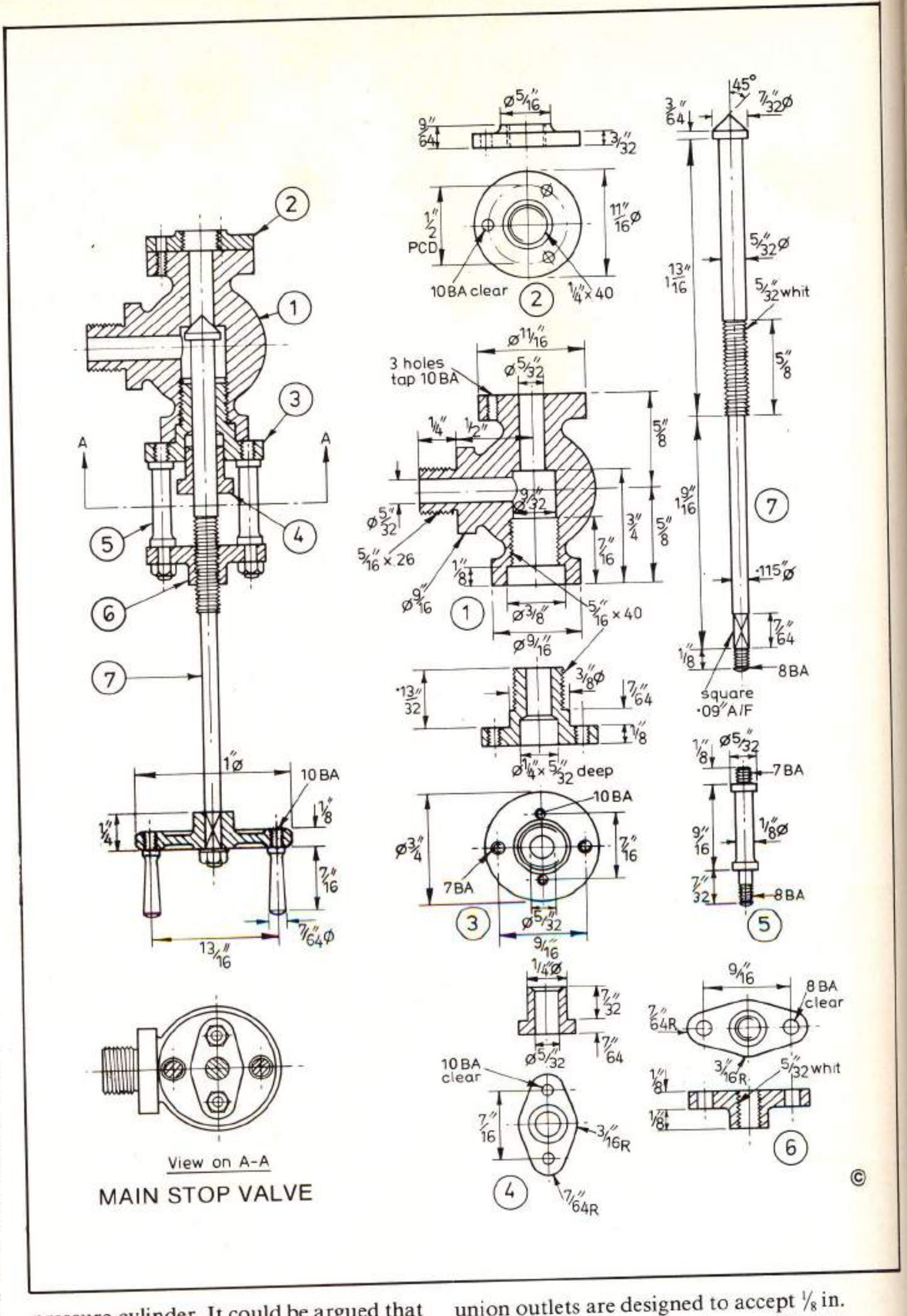

MAIN STOP VALVE

Cylinder Relief Valves

These optional items serve to relieve the cylinders of excess pressure which is most likely to be produced by the trapping of water in the clearance space after the exhaust port has closed. The condition is likely to arise if the cylinder drain valves are closed too soon after starting up, or if for some reason the boiler should prime; its effects are more serious in the intermediate and low pressure cylinders which are not designed to resist high pressures. In an engine using slide valves, these latter serve as a form of relief valve by lifting off their faces under excess pressure, but if piston valves are employed, proper relief valves are essential to avoid possible disasters such as fractured cylinders, etc.

In the model, the upper relief valves are a close copy of full scale practice and incorporate adjusting screws for setting the operating pressure. The valve setting is screwed in from the underside of the body and its threads must be well fitting and smeared with jointing on assembly to avoid leakage. Due to space limitations, the lower valves are, of necessity, of a more compact design and again, due to lack of space, none is fitted to the high pressure cylinder. It could be argued that this cylinder is less likely to be overlooked and water problems are less acute at this end of the engine.

Cylinder Drain Valves

Simple fabricated screwdown valves have been shown for these components; while agreeing that conventional plug cocks with interconnected rod operation might be more in keeping, I much prefer making screwdown valves to tapered plug cocks! Note that the lengths of the bodies of the valves vary for clearance reasons, the 1/2 in. and 3/4 in. lengths being required for the lower valves of the intermediate and low pressure cylinders respectively. The union outlets are designed to accept 1/8 in. dia. pipe, but they may be modified to take 3/32 in. dia. pipe if desired. I find, however, that the smaller pipe is very sluggish in discharging any excess steam oil, especially if the pipe run is of any length.

Feed Pump Pipework and Fittings

As mentioned earlier in the series, the twin pumps are connected in parallel, and the suggested pipework is as shown in the drawing. The pump suction inlets are connected to a simple 'T' piece fitting terminating in a union for 1/4 in. dia. pipe. The 'T' piece is built up by silver-soldering and, to avoid problems, the 3/16 in. pipes from the pump suctions are soft-soldered into the 'T'. To avoid a clumsy appearance, the union is made smaller than is sometimes used for $\frac{1}{4}$ in. dia. pipe, hence the decimalised dimensions opn the bore of the nut (letter M drill) and on the outside of the nipple. In the detail of the nut, the hexagon has been shown turned off at either end, this improves the appearance, but a balance must be maintained between appearance and durability of the hexagon under the action of the spanner — I would not recommend this shortening of the hexagon for nuts which have to be repeatedly unfastened. The delivery pipes for the two pumps likewise terminate in a fitting which, in this case, is four way to accommodate the bypass valve. When making up such fittings, I saddle the side bosses to fit the body (in this case $\frac{3}{8}$ in. dia.) either by filing or by using an end mill of the appropriate diameter, and then attach them to the body by very rusty (to repel the silver solder) 5 or 7 BA screws preparatory to silver-soldering them into position. If one is not too generous with the silver solder, the screws will not become silver-soldered into the body and may readily be removed after silver-soldering and before pickling.

The bypass valve is of standard pattern and I have tried to make it smaller than some valves commercially available. The main body is turned from $\frac{7}{16}$ in. dia. brass bar, the spherical portion being generated using a simple spherical turning attachment. The union boss is silver-soldered into position, using the method described above for locating while soldering. The spindle, gland and union parts are straightforward turning jobs needing no further explanation. When making handwheels, I usually deal with several simultaneously; starting with a brass bar of appropriate diameter, the six holes are index drilled to a depth sufficient to make several handles, and the recesses formed in the periphery, either with a ball nosed end mill or by 'planing' in the lathe, using a round nosed tool on its side and with an indexing device on the lathe mandrel. With the stick of blanks held in the lathe chuck, the underside of a handwheel is finish turned, the bore drilled $\frac{7}{64}$ in dia. and the wheel then parted off, this process being repeated for the requisite number of wheels. For finishing the top face, a wheel is gripped lightly by its rim in a 3-jaw chuck; finally the bore is filed out square to fit the milled square on the spindle.

Cylinder Lubrication

Although not yet fitted to my engine, a mechanical lubricator is highly desirable, feeding into the steam inlet via a non-return valve at the steam 'T' on the high pressure valve chest. The drive for such a lubricator is most readily provided from an eccentric on the crankshaft. I am not detailing a lubricator at present as a multitude of designs has appeared in past issues of *Model Engineer,* mainly in connection with locomotive projects. I have tried several types and, on the score of simplicity, I tend to favour the oscillating cylinder design popularised by LBSC; many of my stationary engines are fitted with such lubricators and they give no trouble. This type has the merit that if the spacing of the ports in the trunnion block is correct, the pump will function as a unit in its own right and is not entirely dependent on the correct functioning of a separate non-return valve, although at least one of these is invariably fitted.

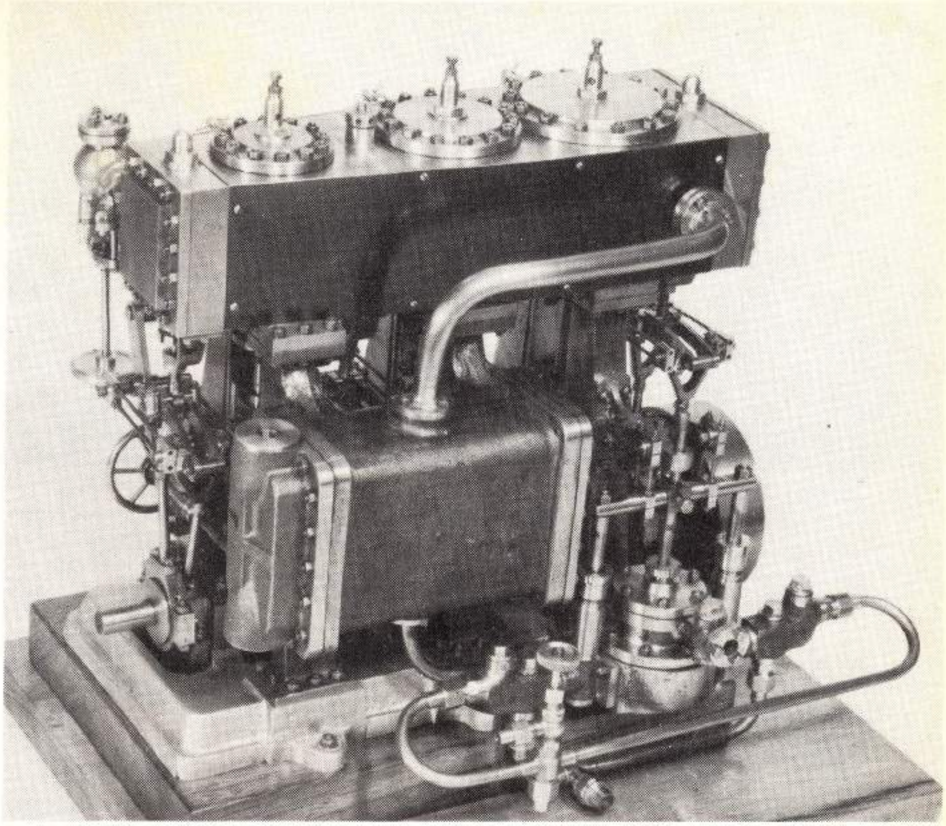

A farewell look at the Author's engine. It can be seen on the A. J. Reeves stand at the forthcoming Model Engineer Exhibition. (Photo: A. J. Reeves & Co.).

Bearing Lubrication

The arrangements to be made for the lubrication of the motion work depend on the purpose for which the engine is to be used, e.g. working load and projected length of unattended operation. For short runs as normally experienced in model work, simple oil cups on the main bearings with periodic lubrication of the remaining parts will suffice. For continuous running under load, something more positive may be considered desirable and builders may prefer an oil box with separate feeds to the bearings and eccentrics. Even with this system it is impossible to cater for all points at which lubrication is required and on balance, for an engine of this size, frequent spot lubrication provides as good a solution as any.

In larger engines I normally provide drilled passages in the crankshaft so that the most heavily loaded bearing in the engine, i.e. the big end, may receive a positive supply. Eccentrics with their short bearing length and large diameter are notoriously difficult to lubricate effectively, and in some full scale marine installations, troughs are provided into which the eccentrics dip and hence pick up a continuous supply of oil. I used this method with great success on a high performance marine engine many years ago. A sheet metal trough enclosing the lower third of the eccentric was attached to the engine baseplate and the resulting improvement in lubrication kept the eccentric in good condition over many years of hard running in a steam launch. The eccentric strap in question was of steel and had a white metal lining and the sheave was of steel. In the same engine, a similar trough formed a partial crankcase around the big end and again the bearing lasted well; the trough also reduced to a small extent the unwanted distribution of oil around the engine compartment of the boat in which the engine was installed. ■